Ulti-Mate™ Connectors

Standard Rectangular Micro-D Connectors

Winchester Interconnect designs and manufactures a broad range of precision engineered Micro D Connectors under our Ulti-Mate™ brand. In addition to the standard products within this catalog, we will collaborate on custom solutions to meet your interconnect needs.

The contact center-to-center pitch for Micro-D Connectors is .050".

Winchester Interconnect

www.winconn.com

Table of Contents

3-31.....Micro-D Wired

4...Standard Profile Metal Shell
11...Standard Profile Pastic Shell
18...Low Profile Metal Shell
25...Low Profile Plastic Shell

32-67.....Micro-D Soldercup

33...Standard Profile Metal Shell Soldercup
40...Standard Profile Plastic Shell Soldercup
47...Low Profile Metal Shell Soldercup
54...Low Profile Plastic Shell Soldercup
61...Standard Profile Metal Shell Soldercup - Cryo Temp

68-128.....Micro-D PCB

69...Right Angle .100 x .100 (Style 1)
74...Right Angle .050 x .100 (Style 2)
79...Right Angle .100 x .100 (Style 5)
84...Vertical .075 x .100 (Style 6)
89...Vertical .075 x .075 (Style 7)
94...Right Angle .075 x .100 (Style 8)
99...Right Angle .075 x .075 (Style 9)
104...Vertical .075 x .100 (Style 16)
109...Vertical .075 x .075 (Style 17)
114...Right Angle .075 x .100 (Style 18)
119...Right Angle .075 x .075 (Style 19)
124...Micro Surface Mount

Winchester Interconnect™

Micro-D Wired

Winchester Interconnect™

Ulti-Mate Micro-D

Wired Standard Profile Metal Shell Connectors

Winchester Interconnect's Ulti-Mate Standard Profile Metal Shell Connectors with wire leads are environmentally sealed and military-compliant connectors that meet MIL-DTL-83513. They are available in 9–100 contacts, rated to -55°C to 125°C (higher-temperature "HT" versions also available), and are rated to carry 3A. They offer low contact resistance, high insulation resistance, and dependable performance from sea level to 70,000 feet.

KEY FEATURES & BENEFITS

- Sealed for Harsh Environments – Reliable performance in moisture, dust, and vibration.
- Wide Temp Range – Operates from -55°C to +125°C; HT versions for extreme heat.
- MIL-DTL-83513 Qualified – Built to strict military standards for proven reliability.
- Flexible Contact Options – 9–100 contacts for design versatility.
- Strong Electrical Performance – Up to 3A, 600 VAC, and ≥5000 MΩ insulation resistance.
- Durable Metal Shell – Offers excellent shielding and mechanical strength.
- Compact, Lightweight Design – Ideal for high-density electronic systems.
- Broad Application Use – Suited for aerospace, defense, and industrial equipment.
- Custom Configurations – Wire leads and finishes available to spec.

2D DIMENSIONAL DATA

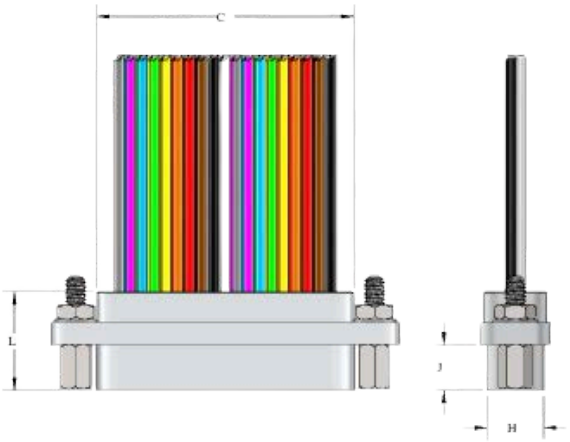

RECEPTACLE (SOCKETS)

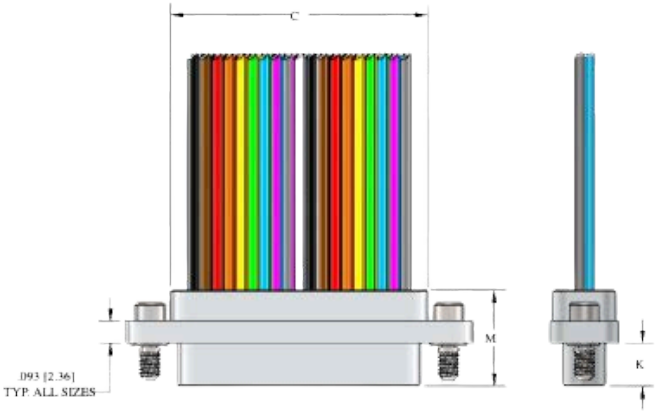

PLUG (PINS)

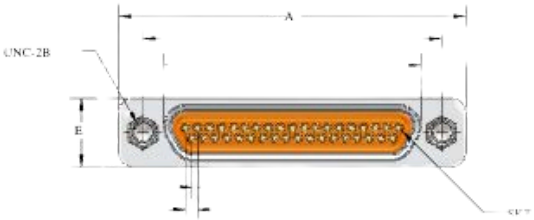

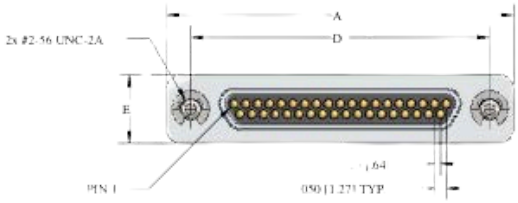

Size	A Max.	B Max.	C Max.	D Nom.	H Max.	E Max.	J Max. (Skt)	K Max. (Pin)	L Max. (Skt)	M Max. (Pin)
	ALL	M &B series								
9	.785 (19.94)	.402 (10.21)	.390 (9.98)	.565 (14.35)	.248 (6.30)	.308 (7.83)	.199 (5.05)	.187 (4.75)	.429 (10.90)	.416 (10.57)
15	.935 (23.75)	.552 (14.02)	.540 (13.79)	.715 (18.16)	.248 (6.30)	.308 (7.83)	.199 (5.05)	.187 (4.75)	.429 (10.90)	.416 (10.57)
21	1.085 (27.56)	.702 (17.83)	.690 (17.60)	.865 (21.47)	.248 (6.30)	.308 (7.83)	.199 (5.05)	.187 (4.75)	.429 (10.90)	.416 (10.57)
25	1.185 (30.10)	.802 (20.37)	.790 (20.14)	.965 (24.51)	.248 (6.30)	.308 (7.83)	.199 (5.05)	.187 (4.75)	.429 (10.90)	.416 (10.57)
31	1.335 (33.91)	.952 (24.18)	.940 (23.95)	1.115 (28.32)	.248 (6.30)	.308 (7.83)	.199 (5.05)	.187 (4.75)	.429 (10.90)	.416 (10.57)
37	1.485 (37.72)	1.102 (27.99)	1.090 (27.76)	1.265 (32.13)	.248 (6.30)	.308 (7.83)	.199 (5.05)	.187 (4.75)	.429 (10.90)	.416 (10.57)
51	1.435 (36.45)	1.054 (26.77)	1.040 (26.44)	1.215 (30.86)	.297 (7.54)	.351 (8.92)	.199 (5.05)	.187 (4.75)	.429 (10.90)	.416 (10.57)
100	2.165 (54.99)	1.505 (38.23)	1.432 (36.63)	1.800 (45.72)	.394 (10.00)	.394 (10.00)	.199 (5.05)	.187 (4.75)	.429 (10.90)	.416 (10.57)

PANEL CUT-OUT DIMENSIONS

		N		P	
Size	**D**	**Front Mount**	**Rear Mount**	**Front Mount**	**Rear Mount**
9	.565	.400	.405	.280	.265
15	.715	.550	.555	.280	.265
21	.865	.700	.705	.280	.265
25	.965	.800	.805	.280	.265
31	1.115	.950	.955	.280	.265
37	1.265	1.100	1.105	.280	.265
51-3	1.215	1.046	1.057	.320	.305
100	1.800	1.445	1.506	.402	.402

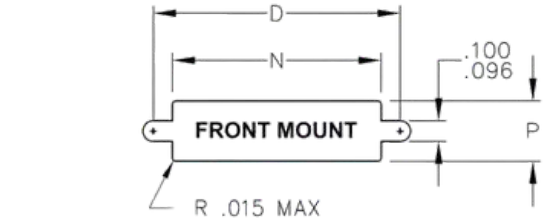

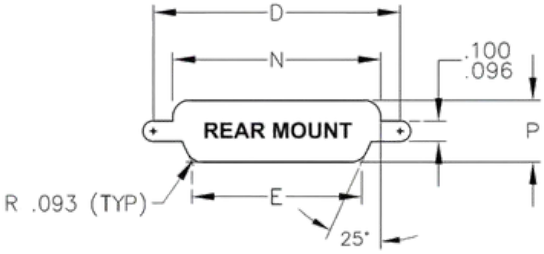

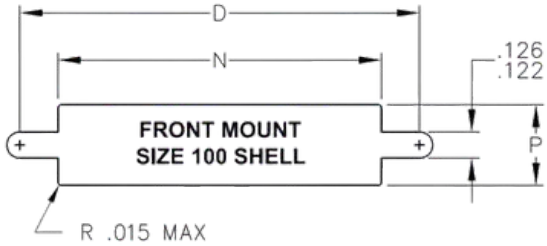

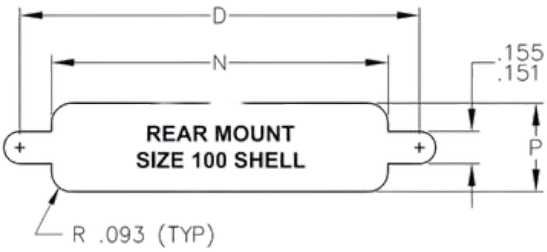

PERFORMANCE DATA

Electrical Properties	
Contact Resistance	8 milliohm max contact only and 32 millohms max with 6" wire @ 2.5A at room temperature
Current Rating	3A max. at room temperature
Dielectric WithStanding Voltage	600 VAC at sea level, 150 VAC at 70,000 feet. 1mA leakage current max. at room temperature
Insulation Resistance	500 VDC and 5000 Megohms min. at room temperature

MEchanical Properties	
Engaging Force	6 oz max. at room temperature
Separation Force	.5 oz min. at room temperature
Mating/Unmating Force	10 oz x # of contacts max.at room temperature
Vibration	EIA-364-28 Condition IV, 1 microsecond max discontinuity at room temperature
Shock	EIA-364-27 Condition E, 1 microsecond max discontinuity at room temperature
Durability	500 matings, passes Mating Force, CR, Eng and Sep Forces at room temperature
Salt Spray	EIA 364-26 Condition B-48 hours at room temperature

HARDWARE

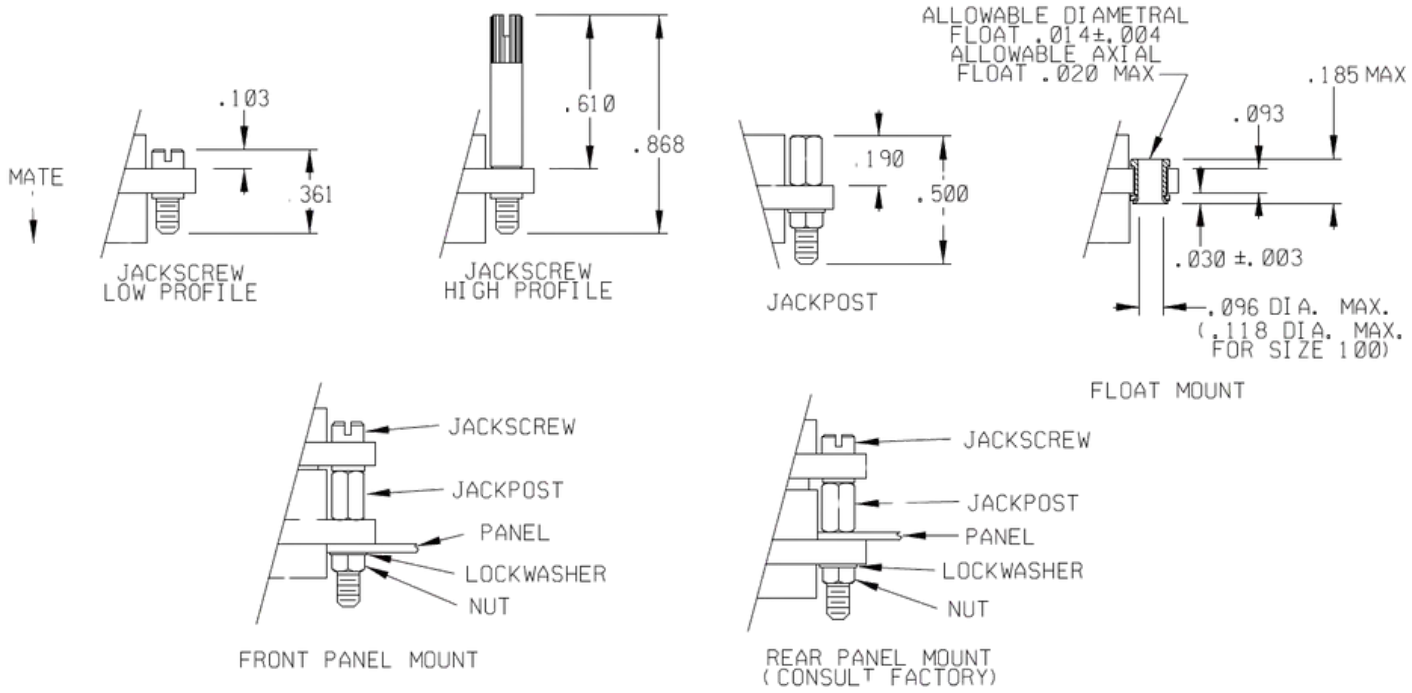

Description	Thread	Used on Sizes	Used On Styles
Jackscrew Lo Allen	2-56 UNC-2A	9 through 51	16,17,18,19
Jackscrew hi Allen	2-56 UNC-2A	9 through 51	16,17,18,19
Jackscrew Lo Slot	2-56 UNC-2A	9 through 51	16,17,18,19
Jackscrew hi Slot	2-56 UNC-2A	9 through 51	16,17,18,19
Jackpost	2-56 UNC-2B	9 through 51	All Styles
Jackscrew Lo Allen	4-40 UNC-2A	100	16,17,18,19
Jackscrew hi Allen	4-40 UNC-2A	100	16,17,18,19

Download the 3D Model

MATERIALS & FINISHES

Description	Thread
Signal Pin Contacts	C17200 Beryllium Copper per ASTM B194
Signal Socket Contacts	C21000 Brass Alloy per ASTM B36
Contact Plating	.000050 Thk Gold Plating per ASTM B488
Shell	6061-T6 Aluminum per SAE-AMS-QQ-A200/8 or Passivated 300 Series Stainless Steel
Shell Plating	Electroless Nickel per AMS 2404 or Cadmium Plated per SAE-AMS-QQ-P-416
Insulator Material	Polyphenylene Sulfide (PPS) Per MIL-M-24519 GST-40F
Hardware	Passivated Stainless Steel Per MIL-DTL-83513/05
Interfacial Seals	Fluorosilicone per MIL-R-25988 Std Profile Receptacles only)
Signal Pin Contacts	C17200 Beryllium Copper per ASTM B194
Signal Socket Contacts	C21000 Brass Alloy per ASTM B36

HOW TO ORDER

MR	51-3	P	Ø2 –	26	E	6 –	18.Ø –	SØ1
Series	Contacts	Contact Gender	Hardware (See below)	Wire Gauge	Wire Type	Wire Color	Length	Finish
M=Metal **R**=PPS	**Ø9**	**P**=Male/Pin (Plug Side)	**Ø** = No Hardware	**24**	**E** = Stranded w/Teflon Insulation, per NEMA HP3-E	**1** = White	**18.Ø**	**SØ1**= Nickel
	15	**S**=Female/Socket (Receptacle Side)	**Ø5** (**15** for Size 1ØØ) = Low Profile Slotted Head Jackscrew	**26**	**M** = Stranded, w/Teflon Insulation, per SAE-AS22759/11	**5** = Color Code per MIL-STD-681 (Non-Repeating Colors)	**36.Ø**	Blank = Cadmium
	21		**Ø6** (**16** for Size 1ØØ) = High Profile Slotted Head Jackscrew	28	**Y** = Stranded w/ Tefzel Insulation, per SAE-AS22759/33	**6** = Color Code per MIL-STD-681 (Repeating Solid Colors)	**72.Ø**	SØ9 = Stainless Steel
	25		**Ø7** (**17** for Size 1ØØ) = Jackpost	3Ø	**C** =Solid Wire, Uninsulated	**3** = Pure Tin plated (Solid Wire)		
	31		Ø2 (12 for Size 1ØØ) = Low Profile Allen Head Jackscrew		F =Stranded, w/Teflon Insulation, per NEMA HP3-ET	**L** = Tin/Lead (minimum 3% Lead) plated		
	37		Ø3 (13 for Size 1ØØ) = High Profile Allen Head Jackscrew			2 = Yellow		
	51-3					4 = Gold plated (Solid Wire)		
	1ØØ							

Ø2 (12 for Size 1ØØ)	Ø3 (13 for Size 1ØØ)	Ø5 (15 for Size 1ØØ)	Ø6 (16 for Size 1ØØ)	Ø7 (17 for Size 1ØØ)
Low Profile Allen Head Jackscrew	High Profile Allen Head Jackscrew	Low Profile Slotted Head Jackscrew	High Profile Slotted Head Jackscrew	Jackpost

Winchester Interconnect.

Ulti-Mate Connectors

Ulti-Mate Micro-D Wired

Standard Profile Plastic Shell Connectors

Winchester Interconnect Micro offers Standard Profile Plastic Shell Connectors with environmentally sealed wire leads for reliable performance in demanding environments. Operating from -55°C to +125°C (up to +200°C with HT versions), these connectors feature high-quality materials and gold-plated contacts. Available in 9–100 contact configurations, they deliver durability and consistent performance in harsh conditions.

KEY FEATURES & BENEFITS

- Sealed Plastic Shell Design – Protects against moisture, dust, and environmental stress.
- Wide Temperature Range – Operates from -55°C to +125°C; HT versions up to +200°C.
- Flexible Contact Options – Available in 9 to 100 contact configurations.
- High-Quality Contact Materials – C17200 Beryllium Copper pins and C21000 Brass sockets.
- Reliable Gold Plating – .000050 Thk Gold per ASTM B488 ensures corrosion resistance.
- Rugged Construction – PPS shell and insulator per MIL-M-24519 GST-40F for durability.
- Passivated Stainless-Steel Hardware – Provides mechanical strength and longevity.

DIMENSIONAL

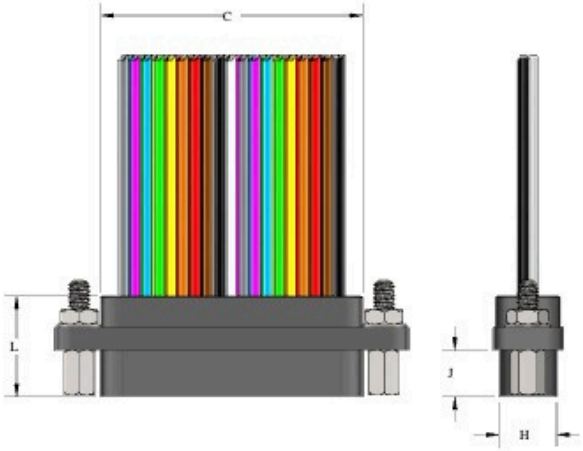

RECEPTACLE (SOCKETS)

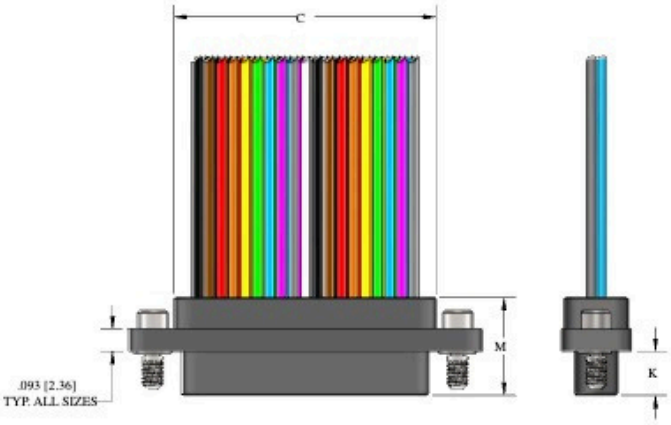

PLUG (PINS)

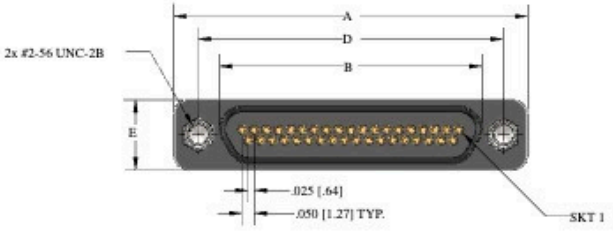

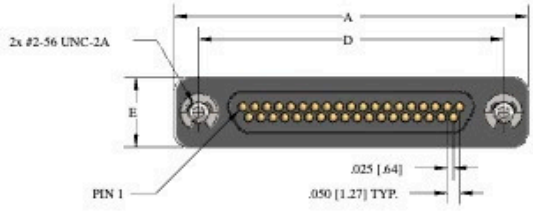

Size		A Max.	B Max.	C Max.	D Nom.	E Max.	J Max.(Skt)	L Max. (Skt)	M Max.(Pin)
			M&B Series						
9	.785(19.94)	.402(10.21)	.390(9.98)	.565(14.35)	.248(6.30)	.308(7.83)	.199(5.05)	.187(4.75)	.429(10.90)
15	.935(23.75)	.552(14.02)	.540(13.79)	.715(18.16)	.248(6.30)	.308(7.83)	.199(5.05)	.187(4.75)	.429(10.90)
21	1.085(27.56)	.702(17.83)	.690(17.60)	.865(21.47)	.248(6.30)	.308(7.83)	.199(5.05)	.187(4.75)	.429(10.90)
25	1.185(30.10)	.802(20.37)	.790(20.14)	.965(24.51)	.248(6.30)	.308(7.83)	.199(5.05)	.187(4.75)	.429(10.90)
31	1.335(33.91)	.952(24.18)	.940(23.95)	1.115(28.32)	.248(6.30)	.308(7.83)	.199(5.05)	.187(4.75)	.429(10.90)
37	1.485(37.72)	1.102(27.99)	1.090(27.76)	1.265(32.13)	.248(6.30)	.308(7.83)	.199(5.05)	.187(4.75)	.429(10.90)
51	1.435(36.45)	1.054(26.77)	1.040(26.44)	1.215(30.86)	.297(7.54)	.351(8.92)	.199(5.05)	.187(4.75)	.429(10.90)
100	2.165(54.99)	1.505(38.23)	1.432(36.63)	1.800(45.72)	.394(10.00)	.394(10.00)	.199(5.05)	.187(4.75)	.429(10.90)

PANEL

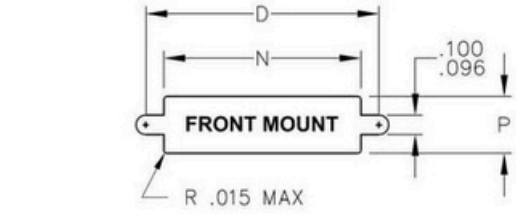

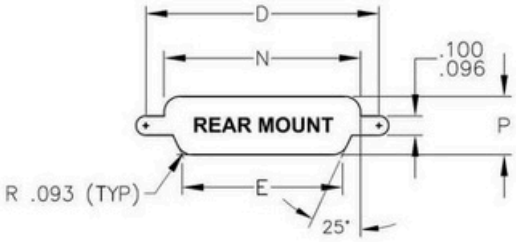

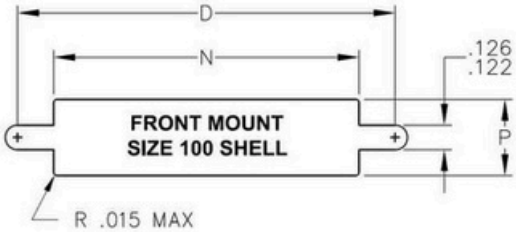

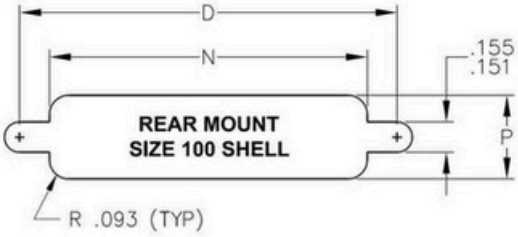

Panel Cut-Out Dimensions					
	ALL	N		P	
Size	D	Front Mount	Rear Mount	Front Mount	Rear Mount
9	.565	.400	.405	.280	.265
15	.715	.550	.555	.280	.265
21	.865	.700	.705	.280	.265
25	.965	.800	.805	.280	.265
31	1.115	.950	.955	.280	.265
37	1.265	1.100	1.105	.280	.265
51-3	1.215	1.046	1.057	.320	.305
100	1.800	1.445	1.506	.402	.402

PERFORMANCE

Electrical Properties	
Contact Resistance	8 milliohm max contact only and 32 millohms max with 6" wire @ 2.5A at room temperature
Current Rating	3A max. at room temperature
Dielectric WithStanding Voltage	600 VAC at sea level, 150 VAC at 70,000 feet. 1mA leakage current max. at room temperature
Insulation Resistance	500 VDC and 5000 Megohms min. at room temperature

Mechanical Properties	
Engaging Force	6 oz max.
Separation Force	.5 oz min.
Mating/Unmating Force	10 oz x # of contacts max.
Vibration	EIA-364-28 Condition IV, 1 microsecond max discontinuity
Shock	EIA-364-27 Condition E, 1 microsecond max discontinuity
Durability	500 matings, passes Mating Force, CR, Eng and Sep Forces

HARDWARE

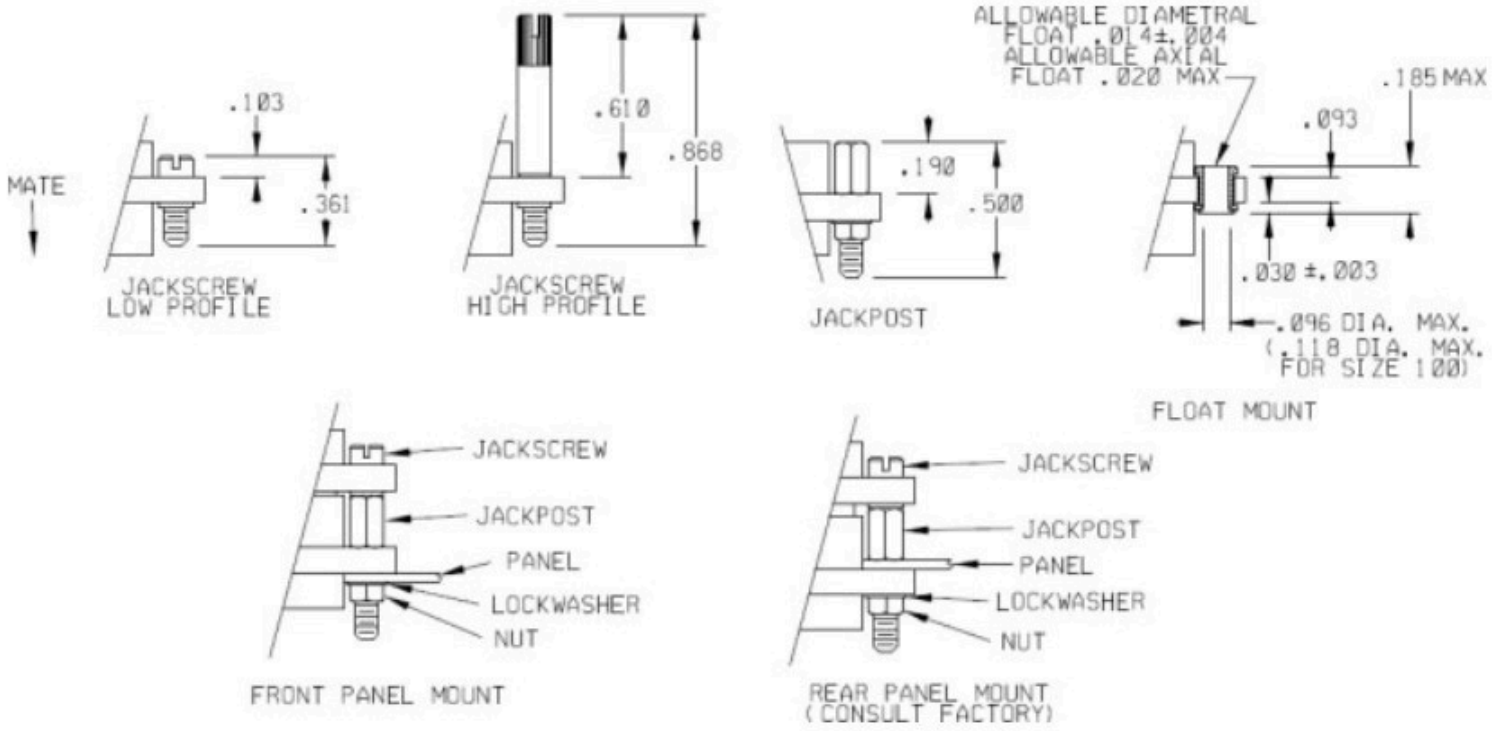

Winchester Interconnect.

MATERIALS

Materials and Finishes	
Signal Pin Contacts	C17200 Beryllium Copper per ASTM B194
Signal Socket Contacts	C21000 Brass Alloy per ASTM B36
Contact Plating	.000050 Thk Gold Plating per ASTM B488
Shell	Polyphenylene Sulfide (PPS) Per MIL-M-24519 GST-40F
Insulator Material	Polyphenylene Sulfide (PPS) Per MIL-M-24519 GST-40F
Hardware	Passivated Stainless Steel Per MIL-DTL-83513/05

HOW TO ORDER

M R E 09 P 07 - 26 E 5 - 18.0 - RPM - 0.062 - S01 - F01 - HT - 1 0 0 SPL

Connector definition **

Connector Type
M = Metal Shell, Standard Profile
B = Plastic Shell, Standard Profile
A = Metal Shell, Low Profile, Receptacle
AP = Metal Shell, Low Profile, Plug
P = Plastic Shell, Low Profile

Insulator Material
R = PPS

Integral EMI Shell
(Omit if EMI shell not required)
(Only available with standard profile metal shell (M))

Size (No. of Contacts)
09, 15, 21, 25, 31, 37, 51-3, 65, 69, & 100

Contact Gender & Type
P = Pin, Crimp Type
N = Pin, Solder Cup (26 & 24 AWG)
S = Socket, Crimp Type
T = Socket, Solder Cup (26 AWG)
TT = Socket, Solder Cup (24 AWG)

Hardware
0 = No Hardware
02 = Low Profile Hex Head Jackscrew (12 for size 100)
03 = High Profile Hex Head Jackscrew (13 for size 100)
05 = Low Profile Slotted Head Jackscrew (15 for size 100)
06 = High Profile Slotted Head Jackscrew (16 for size 100)
07 = Jackposts (17 for size 100)
22 = Captive Low Profile Hex Head Jackscrews
23 = Captive High Profile Hex Head Jackscrews
0T = Threaded Inserts (2-56) in Flange
07T = Threaded inserts and jackposts (17T for size 100)
0F = Float Mount hardware
0G = Guide pins
0GB = Guide Bushings
0R = Retractable low profile jackscrews, allen head

Wire Gauge (Omit for Solder Cup Contacts)
24, 26, 28, & 30 AWG
(25 AWG is available with type C solid wire)

Wire Type (Omit for Solder Cup Contacts)
C = Solid Wire, Uninsulated Per A-A-59551
E = Stranded Wire, NEMA HP3 Type E
F = Stranded Wire Per NEMA HP3 Type ET
M = Stranded Wire per AS22759/11
U = Stranded Wire per AS22759/12
Y = Stranded Wire per AS22759/33
B = Stranded Wire, PVC Insulated (This wire is no longer used. Does not meet maximum temperature and epoxy adhesion requirement)

Wire Color (Insulated Wire) **or Plating** (Uninsulated Wire) (Omit for Solder Cup Contacts)
1 = All White
2 = All Yellow
3 = Pure Tin Plated (Uninsulated Wire) (RoHS Compliant)
4 = Gold Plated (Uninsulated Wire) (RoHS Compliant)
5 = Color Code per MIL-STD-681
6 = Color Code per MIL-STD-681, Repeat Solid Colors
L = Tin/Lead Plated (minimum 3% Lead) (Uninsulated Wire) (Not RoHS Compliant) (Not Available with high temp (HT) connectors)

Lead Length (Omit for Solder Cup contacts)
XX.X = Length in Inches
MXX = Metric Length (CM)

Panel Mount Options (Omit if panel mounting not required)
(Only available on standard profile metal shells)
RPM = Rear Panel Mount
FPM = Front Panel Mount
RPMS = Rear Panel Mount, Sealed w/O-ring
FPMS = Front Panel Mount, Sealed w/O-ring
RPMSC = Rear Panel Mount, Sealed w/Conductive O-ring
FPMSC = Front Panel Mount, Sealed w/Conductive O-ring

Panel Thickness (Omit if panel mounting not required) (Thickness in inches)
Available for .031, .047, .062, .080, .094, .125 thick panels
(Consult Factory for additional Panel Thicknesses)

Shell Plating or Material (Omit for plastic shell or cadmium plating)
Blank = Cadmium
S01 = Electroless Nickel
S02 = Chem Film
S03 = Black Anodized
S04 = Gold
S05 = Titanium
S06 = Olive-Drab Cadmium
S07 = Black Nickel
S08 = Nickel-PTFE
S09 = Stainless Steel, Passivated
S10 = Zinc Nickel

Float Mount Hardware (Omit if float mounts not required)
(This designation is no longer used. Use 0F in hardware position to specify float mount hardware.)

Temperature Rating (Omit for standard Temp, 125°C)
Blank = 125°C
HT = 200°C
LO = 4 Kelvin (only available with solder cup contacts)

Cable Exit Angle
1 = Straight
2 = 90° toward short row side
3 = 90° toward long row side
4 = 45° toward short row side
5 = 45° toward long row side

Inner Shield
0 = No Shield
1 = Tin Plated Copper
2 = Nickel Plated Copper
3 = Silver Plated Copper

Outer Covering
0 = None
1 = M23053/5 Shrink Tubing
2 = M23053/18 Shrink Tubing
3 = Nomex Braid
4 = Expando Plastic Braid

(Omit if EMI shell not required)

Special designator - SPL is to be added to the end of the part number if the connector cannot be fully defined by the rest of the engineering number

** For double ended assemblies, include connector definition for both ends separated by a forward slash (/)
Excludes integral Shell assemblies (Option "E")

Winchester Interconnect

Ulti-Mate Connectors

Ulti-Mate Micro-D Wired

Low Profile Metal Shell Connectors

Winchester Interconnect Micro offers Low Profile Metal Shell Connectors with wire leads designed for reliability in demanding environments. These environmentally sealed connectors operate from -55°C to +125°C, with high-temperature versions up to +200°C (add HT). Available in 9 to 51 contacts, they meet MIL-DTL-83513 standards and deliver consistent electrical performance under extreme conditions.

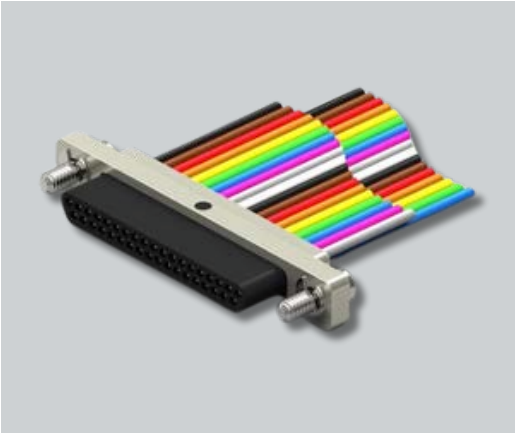

KEY FEATURES & BENEFITS

- Low Profile Metal Shell Design – Ideal for compact, demanding applications.
- Wide Operating Range – Functions from -55°C to +125°C; HT versions up to +200°C.
- MIL-DTL-83513 Compliant – Meets strict military-grade performance standards.
- Reliable Electrical Performance – 3A max current rating and 600 VAC at sea level.
- High Dielectric Strength – 150 VAC rated at 70,000 feet altitude.
- Low Contact Resistance – 8 mΩ (contact only), 32 mΩ with 6" wire at 2.5A.
- Excellent Insulation Resistance – 5000 MΩ minimum at 500 VDC.
- Available Configurations – 9 to 51 contacts for versatile design options.
- Sealed Construction – Protects against environmental contaminants.

DIMENSIONAL

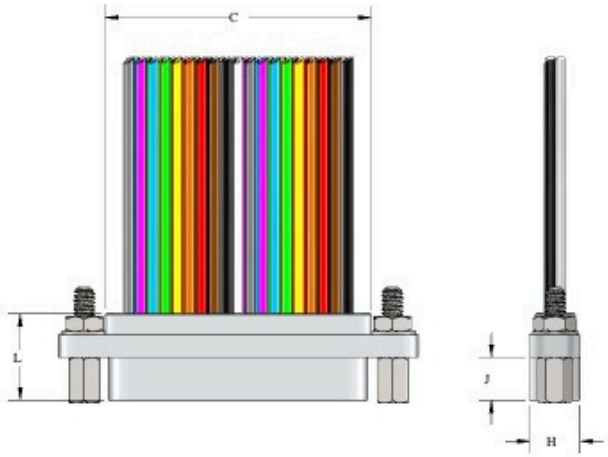

RECEPTACLE (SOCKETS)

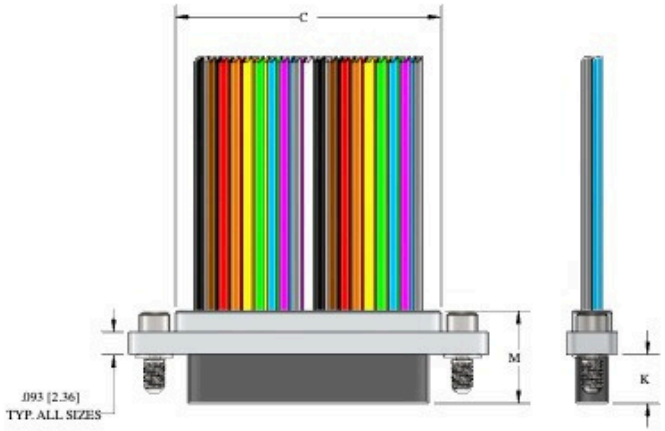

PLUG (PINS)

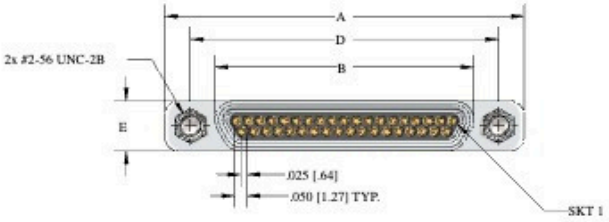

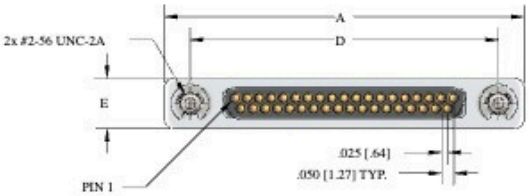

Size	A Max.	B Max.	C Max.	D Nom.	E Max.	J Max.(Skt)	L Max.(Skt)	M Max.(Pin)
	ALL	A&P Series						
9	.785(19.94)	.376(9.55)	.395(9.98)	.565(14.35)	.218(5.54)	.182(4.62)	.375(9.57)	.395(10.03)
15	.935(23.75)	.526(13.36)	.545(13.79)	.715(18.16)	.218(5.54)	.182(4.62)	.375(9.57)	.395(10.03)
21	1.085(27.56)	.693(17.17)	.695(17.60)	.865(21.97)	.218(5.54)	.182(4.62)	.375(9.57)	.395(10.03)
25	1.185(30.10)	.776(19.71)	.795(20.14)	.965(24.51)	.218(5.54)	.182(4.62)	.375(9.57)	.395(10.03)
31	1.335(33.91)	.926(23.52)	.945(23.95)	1.115(28.32)	.218(5.54)	.182(4.62)	.375(9.57)	.395(10.03)
37	1.485(37.72)	1.076(27.33)	1.095(27.76)	1.265(32.13)	.218(5.54)	.182(4.62)	.375(9.57)	.395(10.03)
51-3	1.435(36.45)	1.026(26.06)	1.045(26.44)	1.215(30.86)	.254(6.45)	.182(4.62)	.375(9.57)	.395(10.03)

Winchester Interconnect.

PANEL

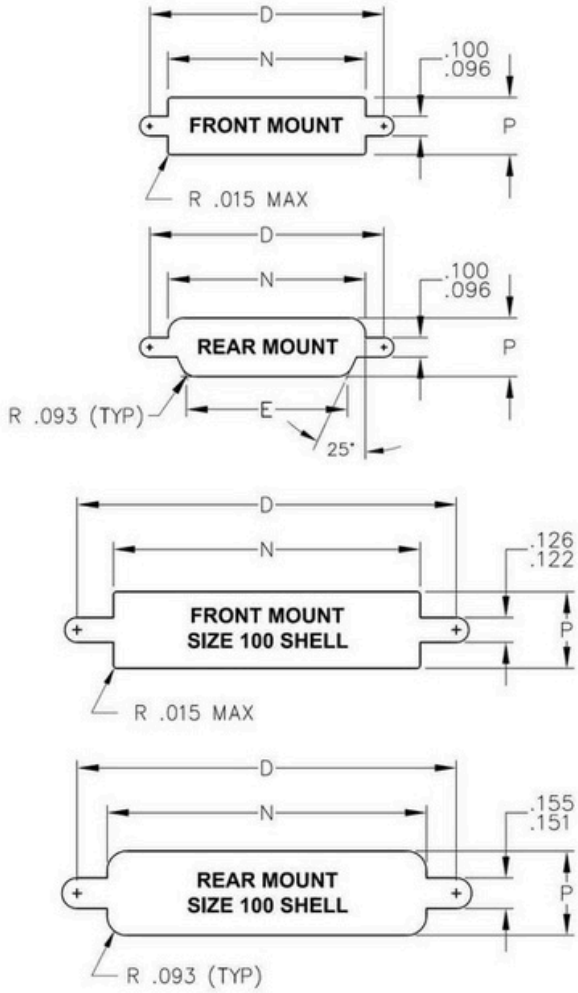

Panel Cut-Out Dimensions					
	ALL	N		P	
Size	D	Front Mount	Rear Mount	Front Mount	Rear Mount
9	.565	.400	.405	.280	.265
15	.715	.550	.555	.280	.265
21	.865	.700	.705	.280	.265
25	.965	.800	.805	.280	.265
31	1.115	.950	.955	.280	.265
37	1.265	1.100	1.105	.280	.265
51-3	1.215	1.046	1.057	.320	.305

PERFORMANCE

Electrical Properties	
Contact Resistance	8 milliohm max contact only and 32 millohms max with 6" wire @ 2.5A at room temperature
Current Rating	3A max. at room temperature
Dielectric WithStanding Voltage	600 VAC at sea level, 150 VAC at 70,000 feet. 1mA leakage current max. at room temperature
Insulation Resistance	500 VDC and 5000 Megohms min. at room temperature

Mechanical Properties

Engaging Force	6 oz max. at room temperature
Separation Force	.5 oz min. at room temperature
Mating/Unmating Force	10 oz x # of contacts max.at room temperature
Vibration	EIA-364-28 Condition IV, 1 microsecond max discontinuity at room temperature
Shock	EIA-364-27 Condition E, 1 microsecond max discontinuity at room temperature
Durability	500 matings, passes Mating Force, CR, Eng and Sep Forces at room temperature
Salt Spray	EIA 364-26 Condition B-48 hours at room temperature

HARDWARE

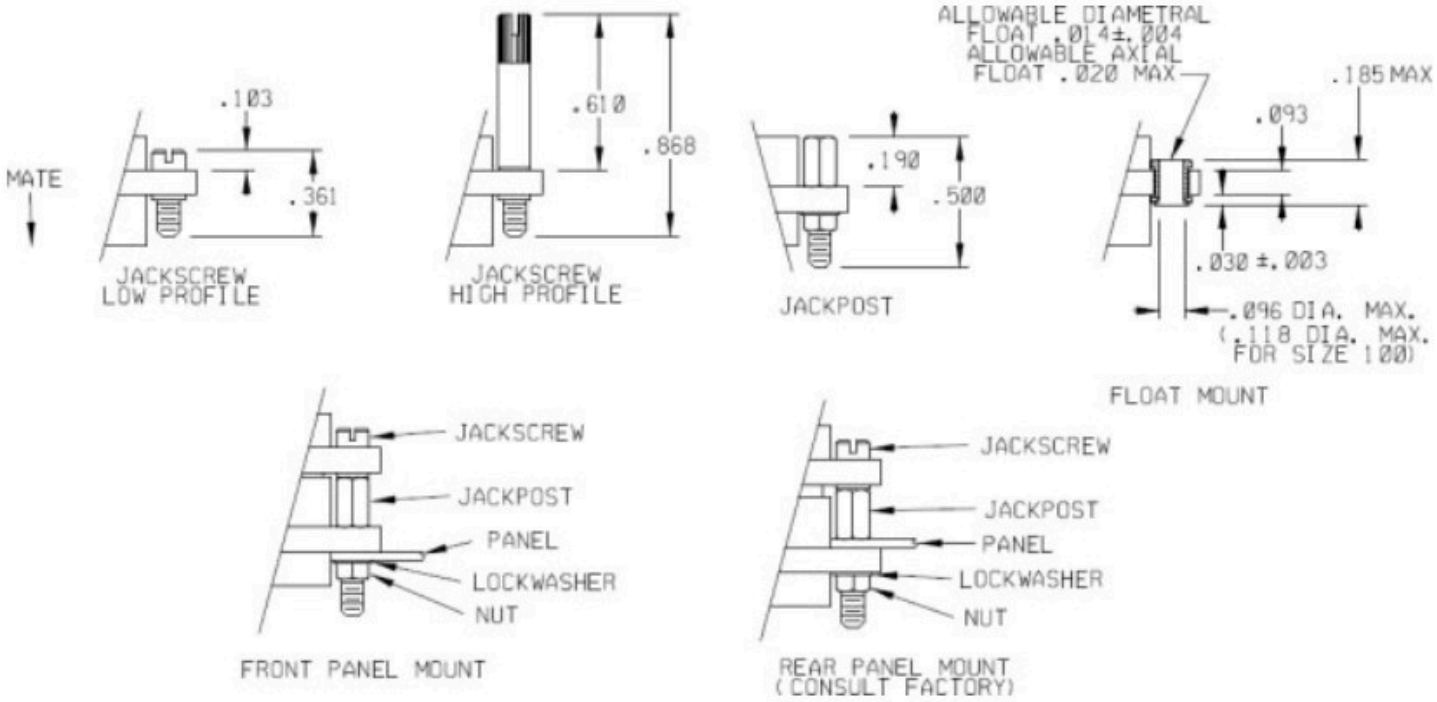

Download the 3D Model

MATERIALS

Materials and Finishes	
Signal Pin Contacts	C17200 Beryllium Copper per ASTM B194
Signal Socket Contacts	C21000 Brass Alloy per ASTM B36
Contact Plating	.000050 Thk Gold Plating per ASTM B488
Shell	6061-T6 Aluminum per SAE-AMS-QQ-A200/8 or Passivated 300 Series Stainless Steel
Shell Plating	Electroless Nickel per AMS 2404 or Cadmium Plated per SAE-AMS-QQ-P-416
Insulator Material	Polyphenylene Sulfide (PPS) Per MIL-M-24519 GST-40F
Hardware	Passivated Stainless Steel Per MIL-DTL-83513/05
Interfacial Seals	Fluorosilicone per MIL-R-25988 Std Profile Receptacles only)

HOW TO ORDER

M R E 09 P 07 - 26 E 5 - 18.0 - RPM - 0.062 - S01 - F01 - HT - 1 0 0 SPL

Connector Type
M = Metal Shell, Standard Profile
B = Plastic Shell, Standard Profile
A = Metal Shell, Low Profile, Receptacle
AP = Metal Shell, Low Profile, Plug
P = Plastic Shell, Low Profile

Insulator Material
R = PPS

Integral EMI Shell
(Omit if EMI shell not required)
(Only available with standard profile metal shell (M))

Size (No. of Contacts)
09, 15, 21, 25, 31, 37, 51-3, 65, 69, & 100

Contact Gender & Type
P = Pin, Crimp Type
N = Pin, Solder Cup (26 & 24 AWG)
S = Socket, Crimp Type
T = Socket, Solder Cup (26 AWG)
TT = Socket, Solder Cup (24 AWG)

Hardware
0 = No Hardware
02 = Low Profile Hex Head Jackscrew (12 for size 100)
03 = High Profile Hex Head Jackscrew (13 for size 100)
05 = Low Profile Slotted Head Jackscrew (15 for size 100)
06 = High Profile Slotted Head Jackscrew (16 for size 100)
07 = Jackposts (17 for size 100)
22 = Captive Low Profile Hex Head Jackscrews
23 = Captive High Profile Hex Head Jackscrews
0T = Threaded Inserts (2-56) in Flange
07T = Threaded inserts and jackposts (17T for size 100)
0F = Float Mount hardware
0G = Guide pins
0GB = Guide Bushings
0R = Retractable low profile jackscrews, allen head

Wire Gauge (Omit for Solder Cup Contacts)
24, 26, 28, & 30 AWG
(25 AWG is available with type C solid wire)

Wire Type (Omit for Solder Cup Contacts)
C = Solid Wire, Uninsulated Per A-A-59551
E = Stranded Wire, NEMA HP3 Type E
F = Stranded Wire Per NEMA HP3 Type ET
M = Stranded Wire per AS22759/11
U = Stranded Wire per AS22759/12
Y = Stranded Wire per AS22759/33
B = Stranded Wire, PVC Insulated (This wire is no longer used. Does not meet maximum temperature and epoxy adhesion requirement)

Wire Color (Insulated Wire) **or Plating** (Uninsulated Wire) (Omit for Solder Cup Contacts)
1 = All White
2 = All Yellow
3 = Pure Tin Plated (Uninsulated Wire) (RoHS Compliant)
4 = Gold Plated (Uninsulated Wire) (RoHS Compliant)
5 = Color Code per MIL-STD-681
6 = Color Code per MIL-STD-681, Repeat Solid Colors
L = Tin/Lead Plated (minimum 3% Lead) (Uninsulated Wire) (Not RoHS Compliant) (Not Available with high temp (HT) connectors)

Lead Length (Omit for Solder Cup contacts)
XX.X = Length in Inches
MXX = Metric Length (CM)

Panel Mount Options (Omit if panel mounting not required)
(Only available on standard profile metal shells)
RPM = Rear Panel Mount
FPM = Front Panel Mount
RPMS = Rear Panel Mount, Sealed w/O-ring
FPMS = Front Panel Mount, Sealed w/O-ring
RPMSC = Rear Panel Mount, Sealed w/Conductive O-ring
FPMSC = Front Panel Mount, Sealed w/Conductive O-ring

Panel Thickness (Omit if panel mounting not required) (Thickness in inches)
Available for .031, .047, .062, .080, .094, .125 thick panels
(Consult Factory for additional Panel Thicknesses)

Shell Plating or Material (Omit for plastic shell or cadmium plating)
Blank = Cadmium
S01 = Electroless Nickel
S02 = Chem Film
S03 = Black Anodized
S04 = Gold
S05 = Titanium
S06 = Olive-Drab Cadmium
S07 = Black Nickel
S08 = Nickel-PTFE
S09 = Stainless Steel, Passivated
S10 = Zinc Nickel

Float Mount Hardware (Omit if float mounts not required)
(This designation is no longer used. Use 0F in hardware position to specify float mount hardware.)

Temperature Rating (Omit for standard Temp, 125°C)
Blank = 125°C
HT = 200°C
LO = 4 Kelvin (only available with solder cup contacts)

Cable Exit Angle
1 = Straight
2 = 90° toward short row side
3 = 90° toward long row side
4 = 45° toward short row side
5 = 45° toward long row side

Inner Shield
0 = No Shield
1 = Tin Plated Copper
2 = Nickel Plated Copper
3 = Silver Plated Copper

Outer Covering
0 = None
1 = M23053/5 Shrink Tubing
2 = M23053/18 Shrink Tubing
3 = Nomex Braid
4 = Expando Plastic Braid

(Omit if EMI shell not required)

Special designator - SPL is to be added to the end of the part number if the connector cannot be fully defined by the rest of the engineering number

Connector definition **

** For double ended assemblies, include connector definition for both ends separated by a forward slash (/)
Excludes integral Shell assemblies (Option "E")

Winchester Interconnect

Ulti-Mate Connectors

Ulti-Mate Micro-D Wired

Low Profile Plastic Shell Connectors

Winchester Interconnect Micro offers Low Profile Plastic Shell Connectors—compact, high-quality solutions for demanding environments. These environmentally sealed connectors operate from −55°C to +125°C, with high-temperature versions available up to +200°C (HT). They provide reliable engagement with a 6 oz max engaging force, 0.5 oz min separation force, and 10 oz × # of contacts max mating/unmating force. Tested per EIA-364-28 for vibration and EIA-364-27 for shock, they ensure durability under extreme conditions.

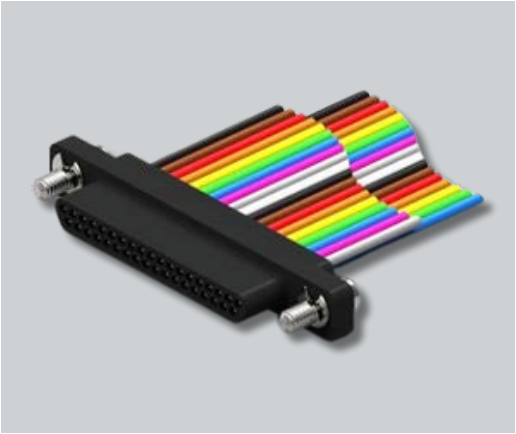

KEY FEATURES & BENEFITS

- Compact, Lightweight Design – Ideal for space-limited applications.
- Sealed Construction – Protects against moisture and harsh environments.
- Wide Temperature Range – Operates from −55°C to +125°C; HT versions to +200°C.
- Reliable Mating Performance – 6 oz max engaging, 0.5 oz min separation force.
- Durable Mechanism – 10 oz × # of contacts max mating/unmating force.
- Tested for Reliability – Meets EIA-364-28 (vibration) and EIA-364-27 (shock) standards.
- High-Quality Construction – Engineered for consistent performance and longevity.

DIMENSIONAL

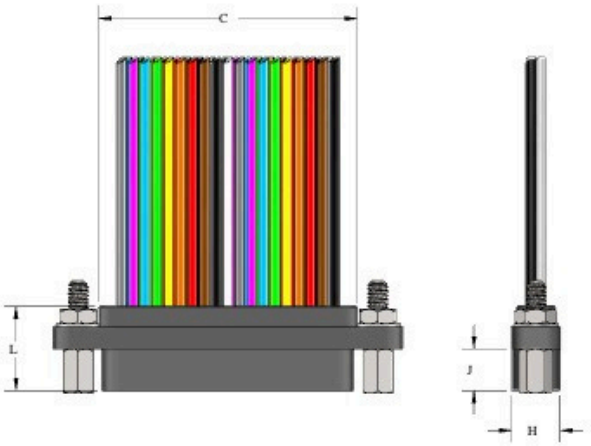

RECEPTACLE (SOCKETS)

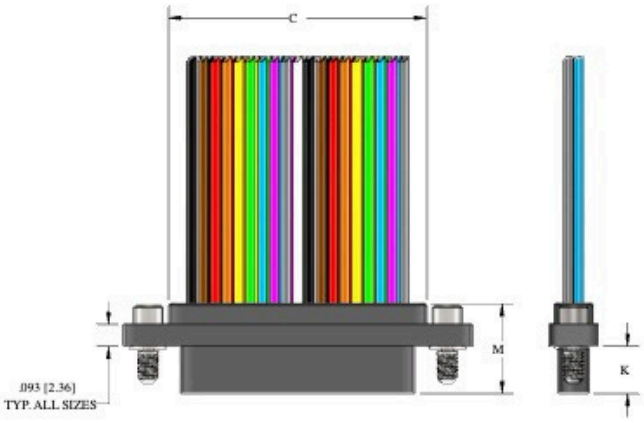

PLUG (PINS)

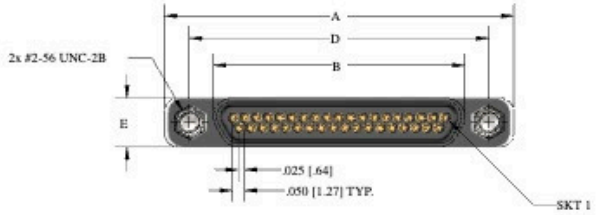

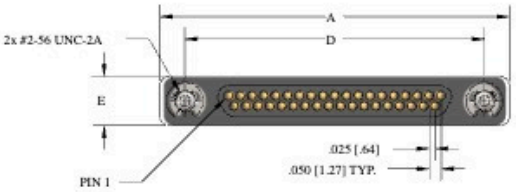

Size	A Max.	B Max.	C Max.	D Nom.	E Max.	J Max.(Skt)	L Max.(Skt)	M Max.(Pin)
		A&P Series						
9	.785(19.94)	.376(9.55)	.395(9.98)	.565(14.35)	.218(5.54)	.182(4.62)	.375(9.57)	.395(10.03)
15	.935(23.75)	.526(13.36)	.545(13.79)	.715(18.16)	.218(5.54)	.182(4.62)	.375(9.57)	.395(10.03)
21	1.085(27.56)	.693(17.17)	.695(17.60)	.865(21.97)	.218(5.54)	.182(4.62)	.375(9.57)	.395(10.03)
25	1.185(30.10)	.776(19.71)	.795(20.14)	.965(24.51)	.218(5.54)	.182(4.62)	.375(9.57)	.395(10.03)
31	1.335(33.91)	.926(23.52)	.945(23.95)	1.115(28.32)	.218(5.54)	.182(4.62)	.375(9.57)	.395(10.03)
37	1.485(37.72)	1.076(27.33)	1.095(27.76)	1.265(32.13)	.218(5.54)	.182(4.62)	.375(9.57)	.395(10.03)
51-3	1.435(36.45)	1.026(26.06)	1.045(26.44)	1.215(30.86)	.254(6.45)	.182(4.62)	.375(9.57)	.395(10.03)

Winchester Interconnect.

PANEL

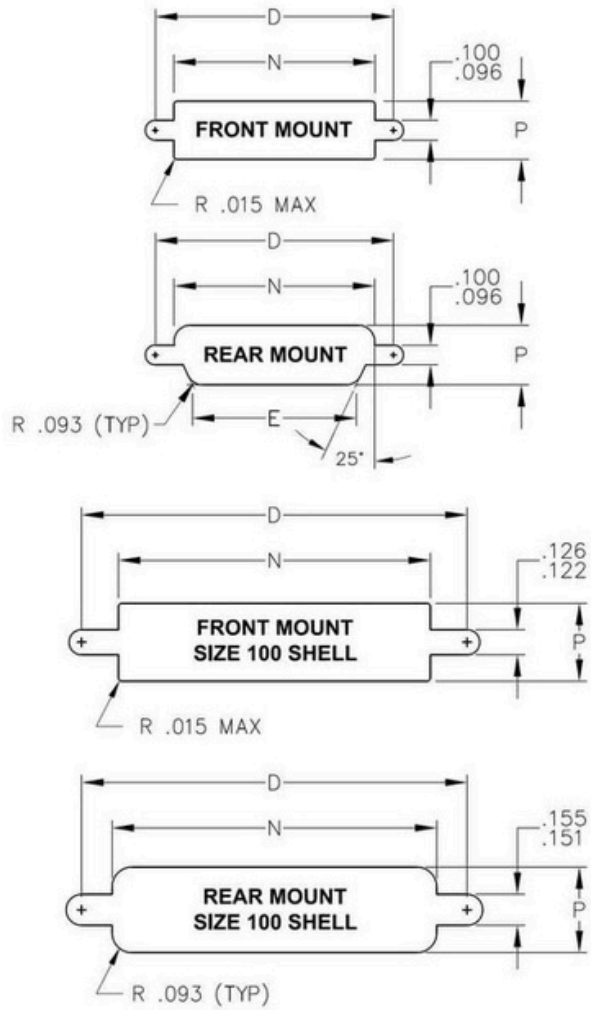

Panel Cut-Out Dimensions					
		N		P	
Size	D	Front Mount	Rear Mount	Front Mount	Rear Mount
9	.565	.400	.405	.280	.265
15	.715	.550	.555	.280	.265
21	.865	.700	.705	.280	.265
25	.965	.800	.805	.280	.265
31	1.115	.950	.955	.280	.265
37	1.265	1.100	1.105	.280	.265
51-3	1.215	1.046	1.057	.320	.305

PERFORMANCE

Electrical Properties	
Contact Resistance	8 milliohm max contact only and 32 millohms max with 6" wire @ 2.5A at room temperature
Current Rating	3A max. at room temperature
Dielectric WithStanding Voltage	600 VAC at sea level, 150 VAC at 70,000 feet. 1mA leakage current max. at room temperature
Insulation Resistance	500 VDC and 5000 Megohms min. at room temperature

Mechanical Properties	
Engaging Force	6 oz max.
Separation Force	.5 oz min.
Mating/Unmating Force	10 oz x # of contacts max.
Vibration	EIA-364-28 Condition IV, 1 microsecond max discontinuity
Shock	EIA-364-27 Condition E, 1 microsecond max discontinuity
Durability	500 matings, passes Mating Force, CR, Eng and Sep Forces

HARDWARE

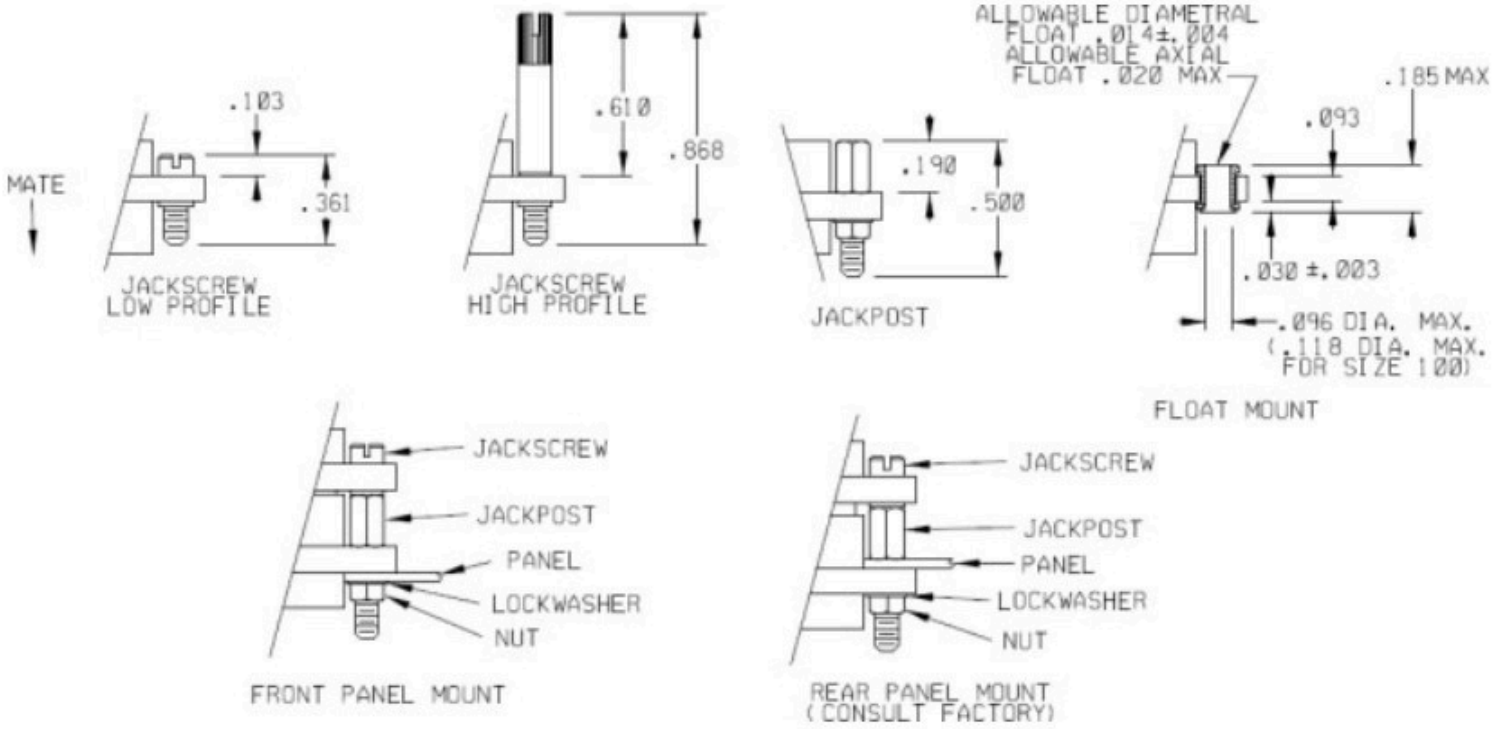

Winchester Interconnect.

MATERIALS

Materials and Finishes	
Signal Pin Contacts	C17200 Beryllium Copper per ASTM B194
Signal Socket Contacts	C21000 Brass Alloy per ASTM B36
Contact Plating	.000050 Thk Gold Plating per ASTM B488
Shell	Polyphenylene Sulfide (PPS) Per MIL-M-24519 GST-40F
Insulator Material	Polyphenylene Sulfide (PPS) Per MIL-M-24519 GST-40F
Hardware	Passivated Stainless Steel Per MIL-DTL-83513/05

HOW TO ORDER

M R E 09 P 07 - 26 E S - 18.0 - RPM - 0.062 - S01 - F01 - HT - 1 0 0 SPL

Connector Type
M = Metal Shell, Standard Profile
B = Plastic Shell, Standard Profile
A = Metal Shell, Low Profile, Receptacle
AP = Metal Shell, Low Profile, Plug
P = Plastic Shell, Low Profile

Insulator Material
R = PPS

Integral EMI Shell
(Omit if EMI shell not required)
(Only available with standard profile metal shell (M))

Size (No. of Contacts)
09, 15, 21, 25, 31, 37, 51-3, 65, 69, & 100

Contact Gender & Type
P = Pin, Crimp Type
N = Pin, Solder Cup (26 & 24 AWG)
S = Socket, Crimp Type
T = Socket, Solder Cup (26 AWG)
TT = Socket, Solder Cup (24 AWG)

Hardware
0 = No Hardware
02 = Low Profile Hex Head Jackscrew (12 for size 100)
03 = High Profile Hex Head Jackscrew (13 for size 100)
05 = Low Profile Slotted Head Jackscrew (15 for size 100)
06 = High Profile Slotted Head Jackscrew (16 for size 100)
07 = Jackposts (17 for size 100)
22 = Captive Low Profile Hex Head Jackscrews
23 = Captive High Profile Hex Head Jackscrews
0T = Threaded Inserts (2-56) in Flange
07T = Threaded inserts and jackposts (17T for size 100)
0F = Float Mount hardware
0G = Guide pins
0GB = Guide Bushings
0R = Retractable low profile jackscrews, allen head

Wire Gauge (Omit for Solder Cup Contacts)
24, 26, 28, & 30 AWG
(25 AWG is available with type C solid wire)

Wire Type (Omit for Solder Cup Contacts)
C = Solid Wire, Uninsulated Per A-A-59551
E = Stranded Wire, NEMA HP3 Type E
F = Stranded Wire Per NEMA HP3 Type ET
M = Stranded Wire per AS22759/11
U = Stranded Wire per AS22759/12
Y = Stranded Wire per AS22759/33
B = Stranded Wire, PVC Insulated (This wire is no longer used. Does not meet maximum temperature and epoxy adhesion requirement)

Wire Color (Insulated Wire) **or Plating** (Uninsulated Wire) (Omit for Solder Cup Contacts)
1 = All White
2 = All Yellow
3 = Pure Tin Plated (Uninsulated Wire) (RoHS Compliant)
4 = Gold Plated (Uninsulated Wire) (RoHS Compliant)
5 = Color Code per MIL-STD-681
6 = Color Code per MIL-STD-681, Repeat Solid Colors
L = Tin/Lead Plated (minimum 3% Lead) (Uninsulated Wire) (Not RoHS Compliant) (Not Available with high temp (HT) connectors)

Lead Length (Omit for Solder Cup contacts)
XX.X = Length in Inches
MXX = Metric Length (CM)

Panel Mount Options (Omit if panel mounting not required)
(Only available on standard profile metal shells)
RPM = Rear Panel Mount
FPM = Front Panel Mount
RPMS = Rear Panel Mount, Sealed w/O-ring
FPMS = Front Panel Mount, Sealed w/O-ring
RPMSC = Rear Panel Mount, Sealed w/Conductive O-ring
FPMSC = Front Panel Mount, Sealed w/Conductive O-ring

Panel Thickness (Omit if panel mounting not required) (Thickness in inches)
Available for .031, .047, .062, .080, .094, .125 thick panels
(Consult Factory for additional Panel Thicknesses)

Shell Plating or Material (Omit for plastic shell or cadmium plating)
Blank = Cadmium
S01 = Electroless Nickel
S02 = Chem Film
S03 = Black Anodized
S04 = Gold
S05 = Titanium
S06 = Olive-Drab Cadmium
S07 = Black Nickel
S08 = Nickel-PTFE
S09 = Stainless Steel, Passivated
S10 = Zinc Nickel

Float Mount Hardware (Omit if float mounts not required)
(This designation is no longer used. Use 0F in hardware position to specify float mount hardware.)

Temperature Rating (Omit for standard Temp, 125°C)
Blank = 125°C
HT = 200°C
LO = 4 Kelvin (only available with solder cup contacts)

Cable Exit Angle
1 = Straight
2 = 90° toward short row side
3 = 90° toward long row side
4 = 45° toward short row side
5 = 45° toward long row side

Inner Shield
0 = No Shield
1 = Tin Plated Copper
2 = Nickel Plated Copper
3 = Silver Plated Copper

Outer Covering
0 = None
1 = M23053/5 Shrink Tubing
2 = M23053/18 Shrink Tubing
3 = Nomex Braid
4 = Expando Plastic Braid

(Omit if EMI shell not required)

Special designator - SPL is to be added to the end of the part number if the connector cannot be fully defined by the rest of the engineering number

Connector definition **
** For double ended assemblies, include connector definition for both ends separated by a forward slash (/)
Excludes integral Shell assemblies (Option "E")

Winchester Interconnect

Interconnect.

Micro-D Soldercup

Winchester Interconnect.

Ulti-Mate Connectors

Ulti-Mate Micro-D Soldercup

Standard Profile Metal Shell Connectors

Winchester Interconnect Micro offers Standard Profile Metal Shell Connectors with Solder Cup Contacts, providing a reliable, environmentally sealed interconnect solution for demanding applications. Operating from −55°C to +125°C, with high-temperature versions up to +200°C (HT), they accommodate 9–100 contacts for 24 AWG wire. Designed to meet MIL-DTL-83513 standards, these connectors deliver 3A max current, 600 VAC dielectric strength at sea level, and 5000 MΩ insulation resistance at 500 VDC.

KEY FEATURES & BENEFITS

- Rugged Metal Shell – Ensures strength and environmental sealing for harsh conditions.
- Wide Temperature Range – Operates from −55°C to +125°C; HT options up to +200°C.
- Flexible Configurations – Supports 9–100 contacts for 24 AWG wire.
- MIL-DTL-83513 Compliant – Meets strict military-grade performance standards.
- Low Contact Resistance – 8 mΩ max (contact only); 32 mΩ max with 6" wire @ 2.5A.
- High Current Capability – Rated 3A max at room temperature.
- Excellent Dielectric Strength – 600 VAC at sea level, 150 VAC at 70,000 ft.
- Superior Insulation – 500 VDC, 5000 MΩ minimum at room temperature.
- Reliable Performance – Precision-built for demanding cable connector applications.

DIMENSIONAL

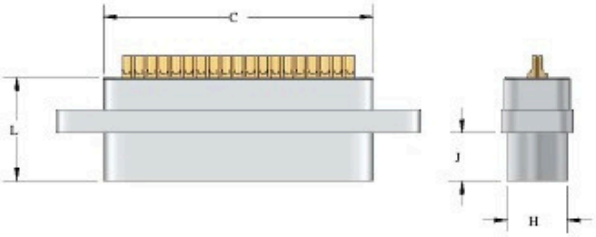

RECEPTACLE (SOCKETS)

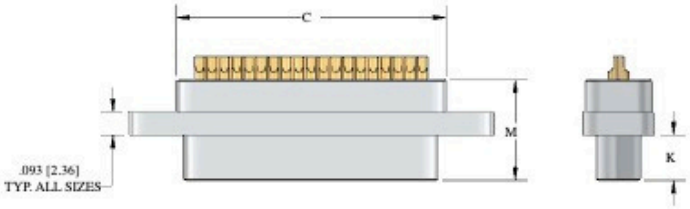

PLUG (PINS)

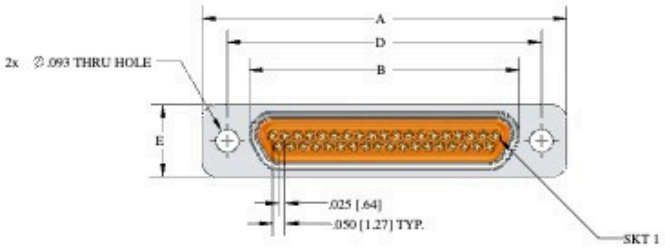

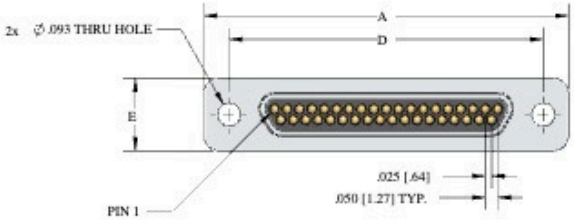

SizeA	Max.	B Max.	C Max.	D Nom.	H Max.	E Max.	J Max.(Skt)	K Max. (Pin)	L Max.(Skt)	M Max. (Pin)
	ALL	M&B Series								
9	.785(19.94)	.402(10.21)	.390(9.98)	.565(14.35)	.248(6.30)	.308(7.83)	.199(5.05)	.187(4.75)	.429(10.90)	.416(10.57)
15	.935(23.75)	.552(14.02)	.540(13.79)	.715(18.16)	.248(6.30)	.308(7.83)	.199(5.05)	.187(4.75)	.429(10.90)	.416(10.57)
21	1.085(27.56)	.702(17.83)	.690(17.60)	.865(21.47)	.248(6.30)	.308(7.83)	.199(5.05)	.187(4.75)	.429(10.90)	.416(10.57)
25	1.185(30.10)	.802(20.37)	.790(20.14)	.965(24.51)	.248(6.30)	.308(7.83)	.199(5.05)	.187(4.75)	.429(10.90)	.416(10.57)
31	1.335(33.91)	.952(24.18)	.940(23.95)	1.115(28.32)	.248(6.30)	.308(7.83)	.199(5.05)	.187(4.75)	.429(10.90)	.416(10.57)
37	1.485(37.72)	1.102(27.99)	1.090(27.76)	1.265(32.13)	.248(6.30)	.308(7.83)	.199(5.05)	.187(4.75)	.429(10.90)	.416(10.57)
51	1.435(36.45)	1.054(26.77)	1.040(26.44)	1.215(30.86)	.297(7.54)	.351(8.92)	.199(5.05)	.187(4.75)	.429(10.90)	.416(10.57)
100	2.165(54.99)	1.505(38.23)	1.432(36.63)	1.800(45.72)	.394(10.00)	.394(10.00)	.199(5.05)	.187(4.75)	.429(10.90)	.416(10.57)

PANEL

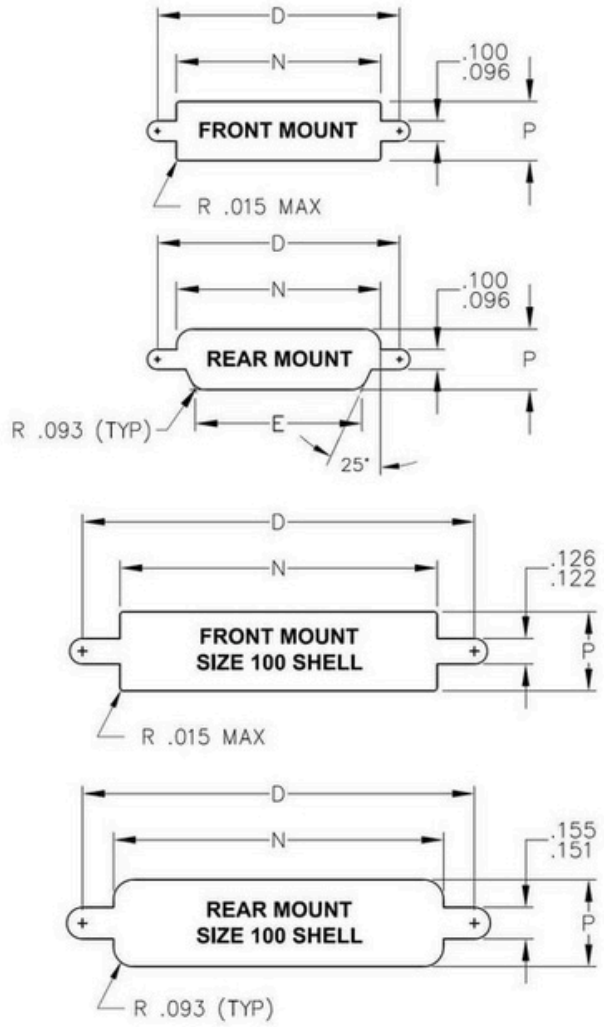

Panel Cut-Out Dimensions					
		N		P	
Size	D	Front Mount	Rear Mount	Front Mount	Rear Mount
9	.565	.400	.405	.280	.265
15	.715	.550	.555	.280	.265
21	.865	.700	.705	.280	.265
25	.965	.800	.805	.280	.265
31	1.115	.950	.955	.280	.265
37	1.265	1.100	1.105	.280	.265
51-3	1.215	1.046	1.057	.320	.305
100	1.800	1.445	1.506	.402	.402

PERFORMANCE

Electrical Properties	
Contact Resistance	8 milliohm max contact only and 32 millohms max with 6" wire @ 2.5A at room temperature
Current Rating	3A max. at room temperature
Dielectric WithStanding Voltage	600 VAC at sea level, 150 VAC at 70,000 feet. 1mA leakage current max. at room temperature
Insulation Resistance	500 VDC and 5000 Megohms min. at room temperature

Mechanical Properties	
Engaging Force	6 oz max. at room temperature
Separation Force	.5 oz min. at room temperature
Mating/Unmating Force	10 oz x # of contacts max.at room temperature
Vibration	EIA-364-28 Condition IV, 1 microsecond max discontinuity at room temperature
Shock	EIA-364-27 Condition E, 1 microsecond max discontinuity at room temperature
Durability	500 matings, passes Mating Force, CR, Eng and Sep Forces at room temperature
Salt Spray	EIA 364-26 Condition B-48 hours at room temperature

HARDWARE

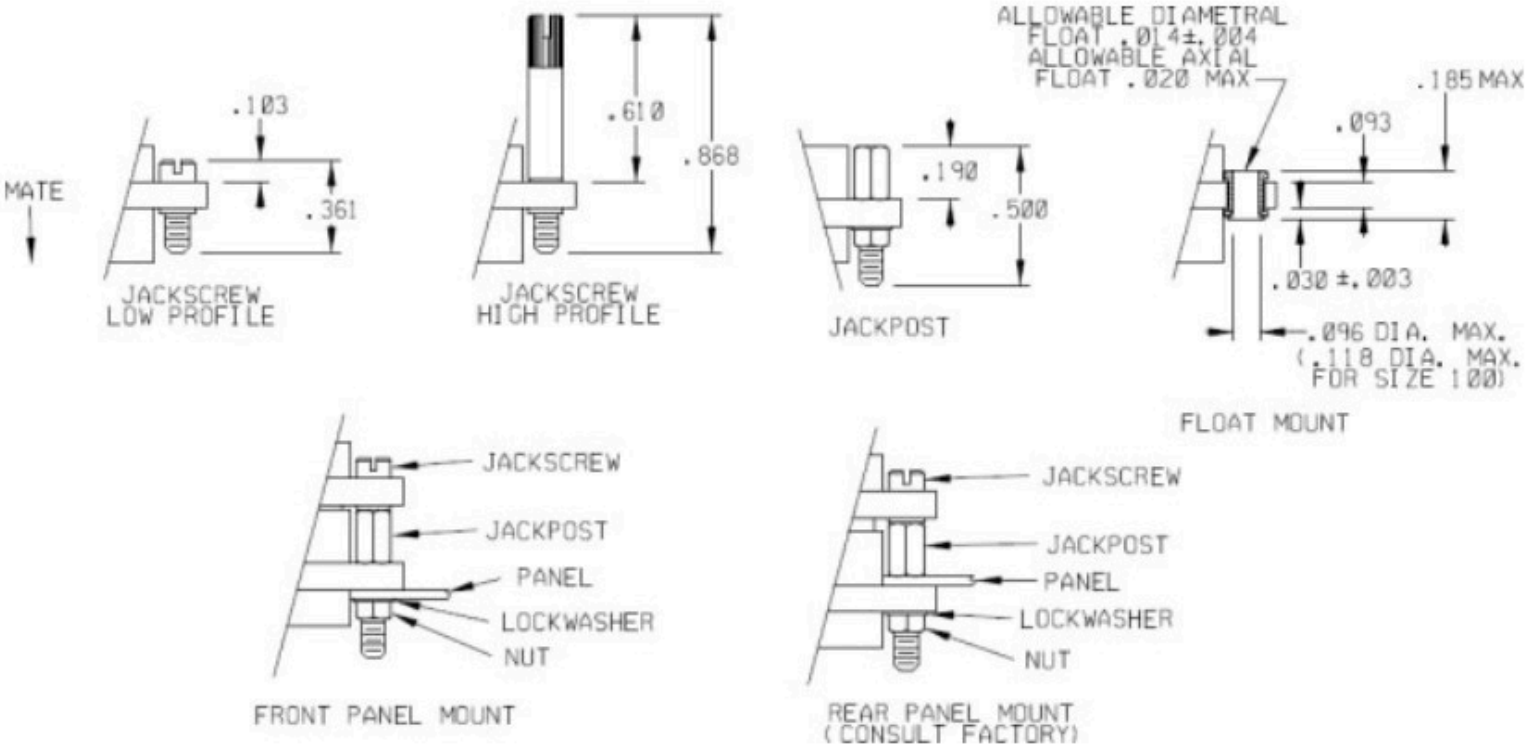

Winchester Interconnect.

MATERIALS

Materials and Finishes	
Signal Pin Contacts	C17200 Beryllium Copper per ASTM B194
Signal Socket Contacts	C31400 Bronze Alloy per ASTM B140
Contact Plating	.000050 Thk Gold Plating per ASTM B488
Shell	6061-T6 Aluminum per SAE-AMS-QQ-A200/8 or Passivated 300 Series Stainless Steel
Shell Plating	Electroless Nickel per AMS 2404 or Cadmium Plated per SAE-AMS-QQ-P-416
Insulator Material	Polyphenylene Sulfide (PPS) Per MIL-M-24519 GST-40F
Hardware	Passivated Stainless Steel Per MIL-DTL-83513/05
Interfacial Seals	Fluorosilicone per MIL-R-25988 Std Profile Receptacles only)

HOW TO ORDER

M R E 09 P 07 - 26 E 5 - 18.0 - RPM - 0.062 - S01 - F01 - HT - 1 0 0 SPL

Connector definition **

Connector Type
M = Metal Shell, Standard Profile
B = Plastic Shell, Standard Profile
A = Metal Shell, Low Profile, Receptacle
AP = Metal Shell, Low Profile, Plug
P = Plastic Shell, Low Profile

Insulator Material
R = PPS

Integral EMI Shell
(Omit if EMI shell not required)
(Only available with standard profile metal shell (M))

Size (No. of Contacts)
09, 15, 21, 25, 31, 37, 51-3, 65, 69, & 100

Contact Gender & Type
P = Pin, Crimp Type
N = Pin, Solder Cup (26 & 24 AWG)
S = Socket, Crimp Type
T = Socket, Solder Cup (26 AWG)
TT = Socket, Solder Cup (24 AWG)

Hardware
0 = No Hardware
02 = Low Profile Hex Head Jackscrew (12 for size 100)
03 = High Profile Hex Head Jackscrew (13 for size 100)
05 = Low Profile Slotted Head Jackscrew (15 for size 100)
06 = High Profile Slotted Head Jackscrew (16 for size 100)
07 = Jackposts (17 for size 100)
22 = Captive Low Profile Hex Head Jackscrews
23 = Captive High Profile Hex Head Jackscrews
0T = Threaded Inserts (2-56) in Flange
07T = Threaded inserts and jackposts (17T for size 100)
0F = Float Mount hardware
0G = Guide pins
0GB = Guide Bushings
0R = Retractable low profile jackscrews, allen head

Wire Gauge (Omit for Solder Cup Contacts)
24, 26, 28, & 30 AWG
(25 AWG is available with type C solid wire)

Wire Type (Omit for Solder Cup Contacts)
C = Solid Wire, Uninsulated Per A-A-59551
E = Stranded Wire, NEMA HP3 Type E
F = Stranded Wire Per NEMA HP3 Type ET
M = Stranded Wire per AS22759/11
U = Stranded Wire per AS22759/12
Y = Stranded Wire per AS22759/33
B = Stranded Wire, PVC Insulated (This wire is no longer used. Does not meet maximum temperature and epoxy adhesion requirement)

Wire Color (Insulated Wire) **or Plating** (Uninsulated Wire) (Omit for Solder Cup Contacts)
1 = All White
2 = All Yellow
3 = Pure Tin Plated (Uninsulated Wire) (RoHS Compliant)
4 = Gold Plated (Uninsulated Wire) (RoHS Compliant)
5 = Color Code per MIL-STD-681
6 = Color Code per MIL-STD-681, Repeat Solid Colors
L = Tin/Lead Plated (minimum 3% Lead) (Uninsulated Wire) (Not RoHS Compliant) (Not Available with high temp (HT) connectors)

Lead Length (Omit for Solder Cup contacts)
XX.X = Length in Inches
MXX = Metric Length (CM)

Panel Mount Options (Omit if panel mounting not required)
(Only available on standard profile metal shells)
RPM = Rear Panel Mount
FPM = Front Panel Mount
RPMS = Rear Panel Mount, Sealed w/O-ring
FPMS = Front Panel Mount, Sealed w/O-ring
RPMSC = Rear Panel Mount, Sealed w/Conductive O-ring
FPMSC = Front Panel Mount, Sealed w/Conductive O-ring

Panel Thickness (Omit if panel mounting not required) (Thickness in inches)
Available for .031, .047, .062, .080, .094, .125 thick panels
(Consult Factory for additional Panel Thicknesses)

Shell Plating or Material (Omit for plastic shell or cadmium plating)
Blank = Cadmium
S01 = Electroless Nickel
S02 = Chem Film
S03 = Black Anodized
S04 = Gold
S05 = Titanium
S06 = Olive-Drab Cadmium
S07 = Black Nickel
S08 = Nickel-PTFE
S09 = Stainless Steel, Passivated
S10 = Zinc Nickel

Float Mount Hardware (Omit if float mounts not required)
(This designation is no longer used. Use 0F in hardware position to specify float mount hardware.)

Temperature Rating (Omit for standard Temp, 125°C)
Blank = 125°C
HT = 200°C
LO = 4 Kelvin (only available with solder cup contacts)

Cable Exit Angle
1 = Straight
2 = 90° toward short row side
3 = 90° toward long row side
4 = 45° toward short row side
5 = 45° toward long row side

Inner Shield
0 = No Shield
1 = Tin Plated Copper
2 = Nickel Plated Copper
3 = Silver Plated Copper

Outer Covering
0 = None
1 = M23053/5 Shrink Tubing
2 = M23053/18 Shrink Tubing
3 = Nomex Braid
4 = Expando Plastic Braid

(Omit if EMI shell not required)

Special designator - SPL is to be added to the end of the part number if the connector cannot be fully defined by the rest of the engineering number

** For double ended assemblies, include connector definition for both ends separated by a forward slash (/)
Excludes integral Shell assemblies (Option "E")

Winchester Interconnect

Ulti-Mate Connectors

Ulti-Mate Micro-D Soldercup

Standard Profile Plastic Shell Connectors

Winchester Interconnect Micro offers Standard Profile Plastic Shell Soldercup Connectors, designed for reliable performance in demanding environments. These environmentally sealed connectors operate from −55°C to +125°C, with high-temperature versions available up to +200°C (HT). Available in 9–100 contact configurations accepting 24 AWG wire, they ensure versatile connectivity. With 3A max current rating, low contact resistance, and high dielectric and insulation performance, these connectors deliver durability and precision across critical applications.

KEY FEATURES & BENEFITS

- Standard Profile Design – Compact, proven geometry for versatile integration.
- Environmentally Sealed – Protects against moisture and harsh conditions.
- Wide Operating Temperature – −55°C to +125°C; HT versions up to +200°C.
- Flexible Contact Options – 9–100 contacts accepting 24 AWG wire.
- Low Contact Resistance – 8 mΩ max (contact only), 32 mΩ with 6" wire @ 2.5A.
- High Current Rating – Supports up to 3A max at room temperature.
- Dielectric Strength – Withstands 600 VAC at sea level, 150 VAC at 70,000 ft.
- Excellent Insulation Resistance – 5000 MΩ min @ 500 VDC.
- Reliable Construction – Ensures stable electrical performance and long service life.

Winchester Interconnect.

DIMENSIONAL

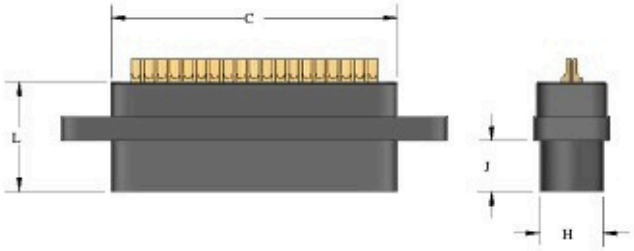

RECEPTACLE (SOCKETS)

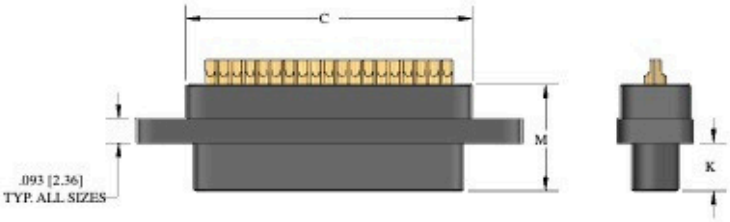

PLUG (PINS)

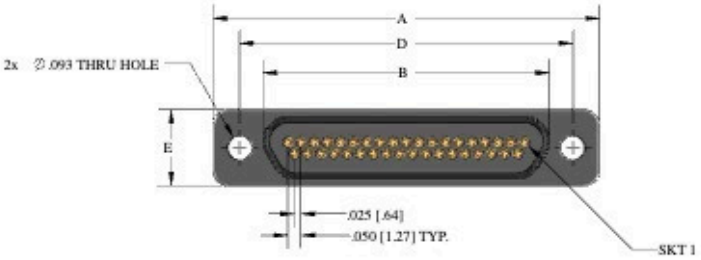

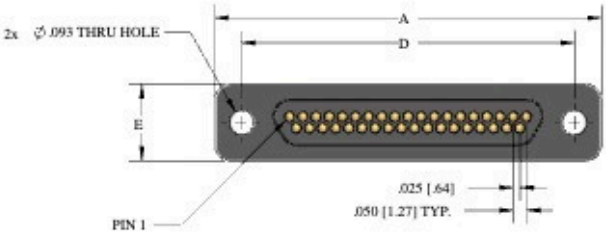

Size	A Max.	B Max.	C Max.	D Nom.	E Max.	J Max.(Skt)	L Max.(Skt)	M Max.(Pin)
	ALL	M&B Series						
9	.785(19.94)	.402(10.21)	.390(9.98)	.565(14.35)	.248(6.30)	.308(7.83)	.199(5.05)	.187(4.75)
15	.935(23.75)	.552(14.02)	.540(13.79)	.715(18.16)	.248(6.30)	.308(7.83)	.199(5.05)	.187(4.75)
21	1.085(27.56)	.702(17.83)	.690(17.60)	.865(21.47)	.248(6.30)	.308(7.83)	.199(5.05)	.187(4.75)
25	1.185(30.10)	.802(20.37)	.790(20.14)	.965(24.51)	.248(6.30)	.308(7.83)	.199(5.05)	.187(4.75)
31	1.335(33.91)	.952(24.18)	.940(23.95)	1.115(28.32)	.248(6.30)	.308(7.83)	.199(5.05)	.187(4.75)
37	1.485(37.72)	1.102(27.99)	1.090(27.76)	1.265(32.13)	.248(6.30)	.308(7.83)	.199(5.05)	.187(4.75)
51	1.435(36.45)	1.054(26.77)	1.040(26.44)	1.215(30.86)	.297(7.54)	.351(8.92)	.199(5.05)	.187(4.75)
100	2.165(54.99)	1.505(38.23)	1.432(36.63)	1.800(45.72)	.394(10.00)	.394(10.00)	.199(5.05)	.187(4.75)

Winchester Interconnect.

PANEL

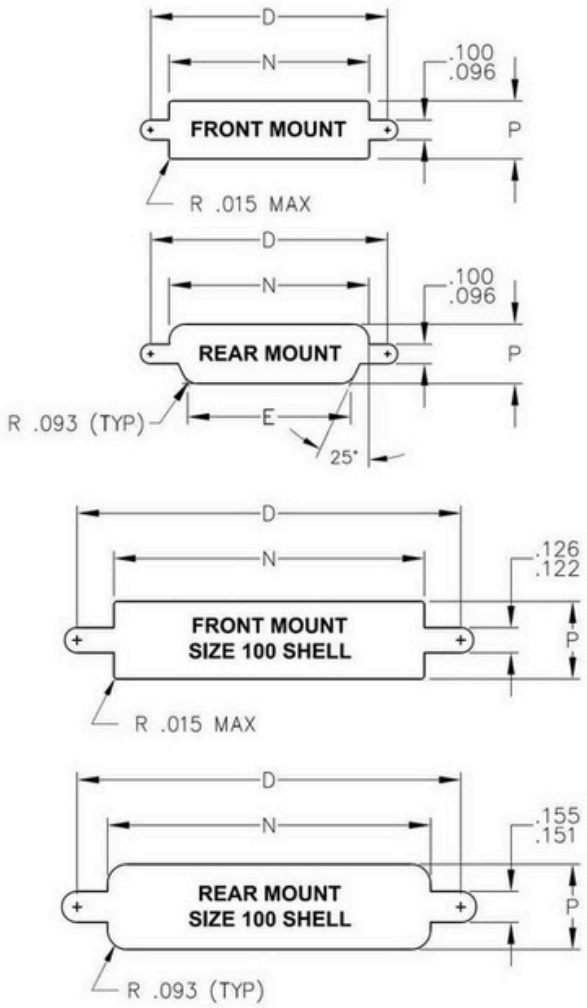

Panel Cut-Out Dimensions					
	ALL	N		P	
Size	D	Front Mount	Rear Mount	Front Mount	Rear Mount
9	.565	.400	.405	.280	.265
15	.715	.550	.555	.280	.265
21	.865	.700	.705	.280	.265
25	.965	.800	.805	.280	.265
31	1.115	.950	.955	.280	.265
37	1.265	1.100	1.105	.280	.265
51-3	1.215	1.046	1.057	.320	.305
100	1.800	1.445	1.506	.402	.402

PERFORMANCE

Electrical Properties	
Contact Resistance	8 milliohm max contact only and 32 millohms max with 6" wire @ 2.5A at room temperature
Current Rating	3A max. at room temperature
Dielectric WithStanding Voltage	600 VAC at sea level, 150 VAC at 70,000 feet. 1mA leakage current max. at room temperature
Insulation Resistance	500 VDC and 5000 Megohms min. at room temperature

Mechanical Properties	
Engaging Force	6 oz max.
Separation Force	.5 oz min.
Mating/Unmating Force	10 oz x # of contacts max.
Vibration	EIA-364-28 Condition IV, 1 microsecond max discontinuity
Shock	EIA-364-27 Condition E, 1 microsecond max discontinuity
Durability	500 matings, passes Mating Force, CR, Eng and Sep Forces

HARDWARE

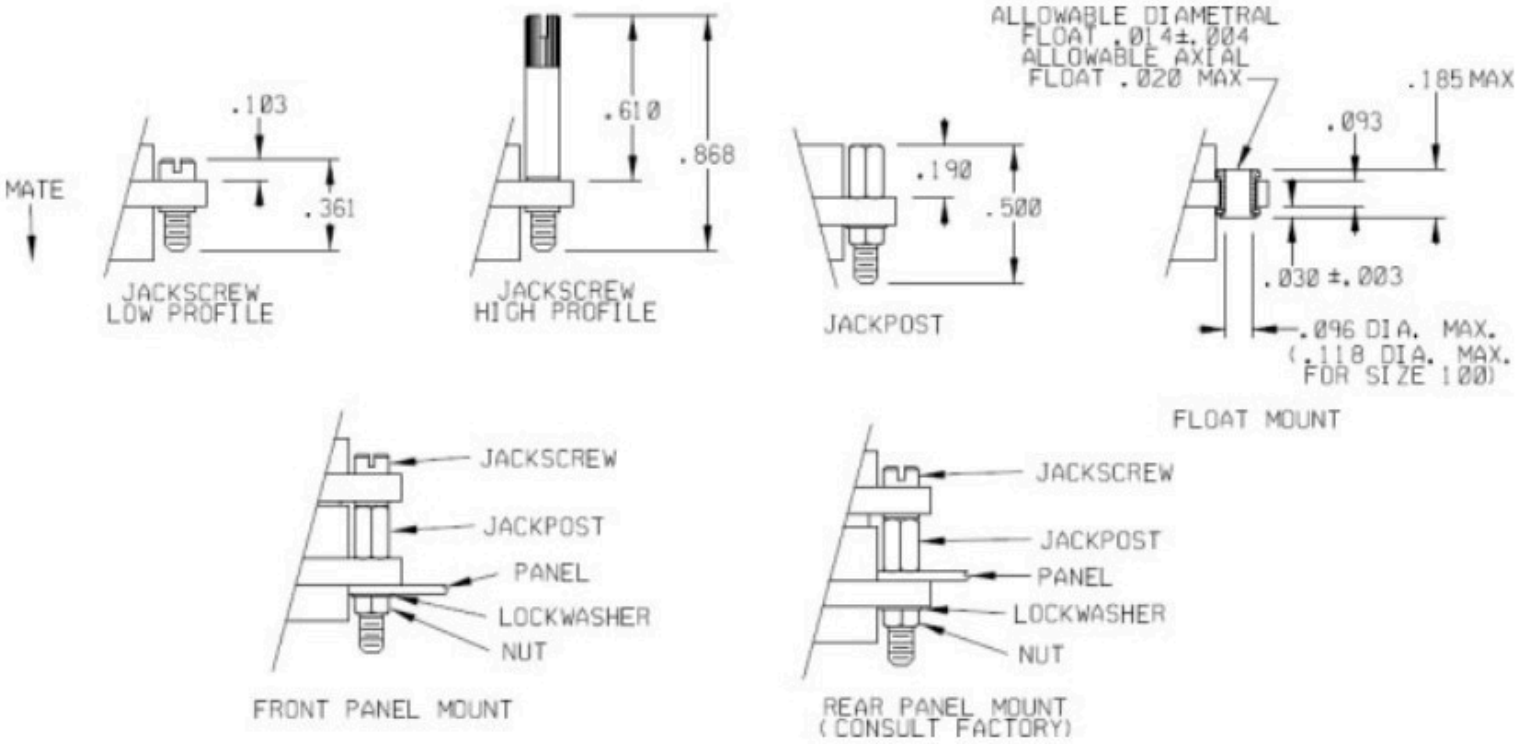

Winchester Interconnect.

MATERIALS

Materials and Finishes	
Signal Pin Contacts	C17200 Beryllium Copper per ASTM B194
Signal Socket Contacts	C31400 Bronze Alloy per ASTM B140
Contact Plating	.000050 Thk Gold Plating per ASTM B488
Shell	Polyphenylene Sulfide (PPS) Per MIL-M-24519 GST-40F
Insulator Material	Polyphenylene Sulfide (PPS) Per MIL-M-24519 GST-40F
Hardware	Passivated Stainless Steel Per MIL-DTL-83513/05

HOW TO ORDER

M R E 09 P 07 - 26 E 5 - 18.0 - RPM - 0.062 - S01 - F01 - HT - 1 0 0 SPL

Connector definition **

Connector Type
M = Metal Shell, Standard Profile
B = Plastic Shell, Standard Profile
A = Metal Shell, Low Profile, Receptacle
AP = Metal Shell, Low Profile, Plug
P = Plastic Shell, Low Profile

Insulator Material
R = PPS

Integral EMI Shell
(Omit if EMI shell not required)
(Only available with standard profile metal shell (M))

Size (No. of Contacts)
09, 15, 21, 25, 31, 37, 51-3, 65, 69, & 100

Contact Gender & Type
P = Pin, Crimp Type
N = Pin, Solder Cup (26 & 24 AWG)
S = Socket, Crimp Type
T = Socket, Solder Cup (26 AWG)
TT = Socket, Solder Cup (24 AWG)

Hardware
0 = No Hardware
02 = Low Profile Hex Head Jackscrew (12 for size 100)
03 = High Profile Hex Head Jackscrew (13 for size 100)
05 = Low Profile Slotted Head Jackscrew (15 for size 100)
06 = High Profile Slotted Head Jackscrew (16 for size 100)
07 = Jackposts (17 for size 100)
22 = Captive Low Profile Hex Head Jackscrews
23 = Captive High Profile Hex Head Jackscrews
0T = Threaded Inserts (2-56) in Flange
07T = Threaded inserts and jackposts (17T for size 100)
0F = Float Mount hardware
0G = Guide pins
0GB = Guide Bushings
0R = Retractable low profile jackscrews, allen head

Wire Gauge (Omit for Solder Cup Contacts)
24, 26, 28, & 30 AWG
(25 AWG is available with type C solid wire)

Wire Type (Omit for Solder Cup Contacts)
C = Solid Wire, Uninsulated Per A-A-59551
E = Stranded Wire, NEMA HP3 Type E
F = Stranded Wire Per NEMA HP3 Type ET
M = Stranded Wire per AS22759/11
U = Stranded Wire per AS22759/12
Y = Stranded Wire per AS22759/33
B = Stranded Wire, PVC Insulated (This wire is no longer used. Does not meet maximum temperature and epoxy adhesion requirement)

Wire Color (Insulated Wire) **or Plating** (Uninsulated Wire) (Omit for Solder Cup Contacts)
1 = All White
2 = All Yellow
3 = Pure Tin Plated (Uninsulated Wire) (RoHS Compliant)
4 = Gold Plated (Uninsulated Wire) (RoHS Compliant)
5 = Color Code per MIL-STD-681
6 = Color Code per MIL-STD-681, Repeat Solid Colors
L = Tin/Lead Plated (minimum 3% Lead) (Uninsulated Wire) (Not RoHS Compliant) (Not Available with high temp (HT) connectors)

Lead Length (Omit for Solder Cup contacts)
XX.X = Length in Inches
MXX = Metric Length (CM)

Panel Mount Options (Omit if panel mounting not required)
(Only available on standard profile metal shells)
RPM = Rear Panel Mount
FPM = Front Panel Mount
RPMS = Rear Panel Mount, Sealed w/O-ring
FPMS = Front Panel Mount, Sealed w/O-ring
RPMSC = Rear Panel Mount, Sealed w/Conductive O-ring
FPMSC = Front Panel Mount, Sealed w/Conductive O-ring

Panel Thickness (Omit if panel mounting not required) (Thickness in inches)
Available for .031, .047, .062, .080, .094, .125 thick panels
(Consult Factory for additional Panel Thicknesses)

Shell Plating or Material (Omit for plastic shell or cadmium plating)
Blank = Cadmium
S01 = Electroless Nickel
S02 = Chem Film
S03 = Black Anodized
S04 = Gold
S05 = Titanium
S06 = Olive-Drab Cadmium
S07 = Black Nickel
S08 = Nickel-PTFE
S09 = Stainless Steel, Passivated
S10 = Zinc Nickel

Float Mount Hardware (Omit if float mounts not required)
(This designation is no longer used. Use 0F in hardware position to specify float mount hardware.)

Temperature Rating (Omit for standard Temp, 125°C)
Blank = 125°C
HT = 200°C
LO = 4 Kelvin (only available with solder cup contacts)

Cable Exit Angle
1 = Straight
2 = 90° toward short row side
3 = 90° toward long row side
4 = 45° toward short row side
5 = 45° toward long row side

Inner Shield
0 = No Shield
1 = Tin Plated Copper
2 = Nickel Plated Copper
3 = Silver Plated Copper

Outer Covering
0 = None
1 = M23053/5 Shrink Tubing
2 = M23053/18 Shrink Tubing
3 = Nomex Braid
4 = Expando Plastic Braid

(Omit if EMI shell not required)

Special designator - SPL is to be added to the end of the part number if the connector cannot be fully defined by the rest of the engineering number

** For double ended assemblies, include connector definition for both ends separated by a forward slash (/)
Excludes integral Shell assemblies (Option "E")

Winchester Interconnect

Ulti-Mate Connectors

Ulti-Mate Micro-D Soldercup

Low Profile Metal Shell Connectors

Winchester Interconnect Micro offers Low Profile Metal Shell Soldercup Connectors, providing a high-quality, environmentally sealed solution for demanding applications. Designed to operate from −55°C to +125°C, with high-temperature versions available up to +200°C (HT), these MIL-DTL-83513 compliant rectangular connectors support 9–51 contacts accepting 24 AWG wire. They ensure reliable mechanical performance with an engaging force of 6 oz max, separation force of 0.5 oz min, and mating/unmating force of 10 oz × number of contacts.

KEY FEATURES & BENEFITS

- Low Profile Design – Compact metal shell ideal for space-constrained applications.
- Environmentally Sealed – Ensures reliable performance in harsh conditions.
- Wide Operating Temperature Range – −55°C to +125°C; HT versions up to +200°C.
- Flexible Contact Options – Available in 9–51 contact configurations for 24 AWG wire.
- MIL-DTL-83513 Compliant – Meets stringent military and industry standards.
- Consistent Mating Performance – 6 oz max engaging, 0.5 oz min separation, 10 oz × contacts mating force.
- Durable Metal Shell Construction – Provides superior shielding and mechanical strength.
- Reliable Electrical Connectivity – Built for consistent signal integrity in critical systems.

DIMENSIONAL

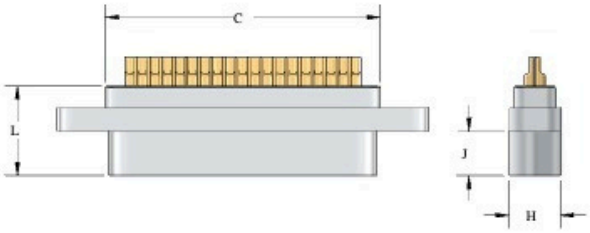

RECEPTACLE (SOCKETS)

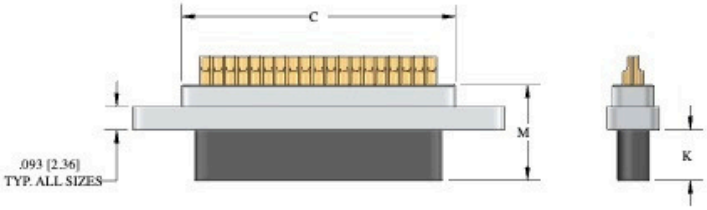

PLUG (PINS)

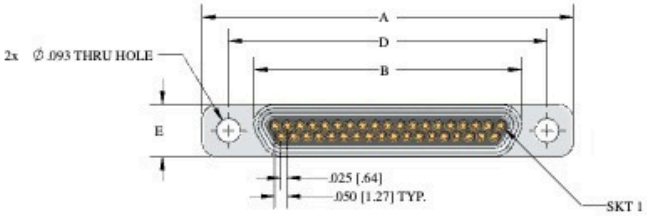

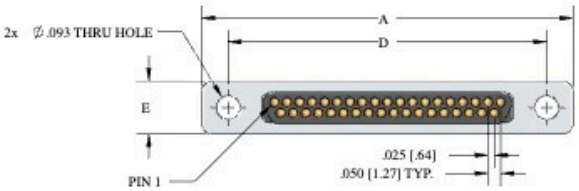

Size	A Max.	B Max.	C Max.	D Nom.	E Max.	J Max.(Skt)	L Max.(Skt)	M Max.(Pin)
	ALL	A&P Series						
9	.785(19.94)	.376(9.55)	.395(9.98)	.565(14.35)	.218(5.54)	.182(4.62)	.375(9.57)	.395(10.03)
15	.935(23.75)	.526(13.36)	.545(13.79)	.715(18.16)	.218(5.54)	.182(4.62)	.375(9.57)	.395(10.03)
21	1.085(27.56)	.693(17.17)	.695(17.60)	.865(21.97)	.218(5.54)	.182(4.62)	.375(9.57)	.395(10.03)
25	1.185(30.10)	.776(19.71)	.795(20.14)	.965(24.51)	.218(5.54)	.182(4.62)	.375(9.57)	.395(10.03)
31	1.335(33.91)	.926(23.52)	.945(23.95)	1.115(28.32)	.218(5.54)	.182(4.62)	.375(9.57)	.395(10.03)
37	1.485(37.72)	1.076(27.33)	1.095(27.76)	1.265(32.13)	.218(5.54)	.182(4.62)	.375(9.57)	.395(10.03)
51-3	1.435(36.45)	1.026(26.06)	1.045(26.44)	1.215(30.86)	.254(6.45)	.182(4.62)	.375(9.57)	.395(10.03)

Winchester Interconnect.

PANEL

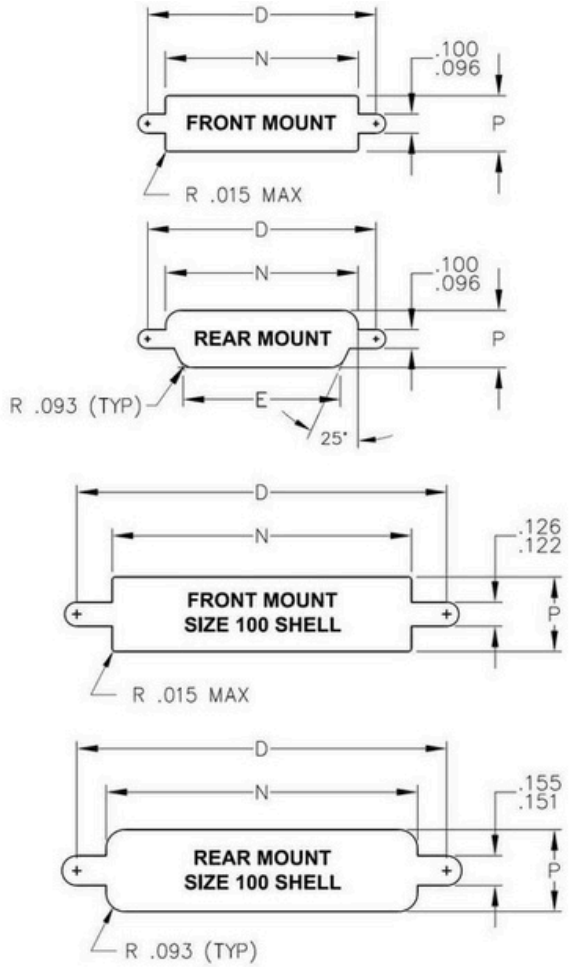

Panel Cut-Out Dimensions					
	ALL	N		P	
Size	D	Front Mount	Rear Mount	Front Mount	Rear Mount
9	.565	.400	.405	.280	.265
15	.715	.550	.555	.280	.265
21	.865	.700	.705	.280	.265
25	.965	.800	.805	.280	.265
31	1.115	.950	.955	.280	.265
37	1.265	1.100	1.105	.280	.265
51-3	1.215	1.046	1.057	.320	.305

PERFORMANCE

Electrical Properties	
Contact Resistance	8 milliohm max contact only and 32 millohms max with 6" wire @ 2.5A at room temperature
Current Rating	3A max. at room temperature
Dielectric WithStanding Voltage	600 VAC at sea level, 150 VAC at 70,000 feet. 1mA leakage current max. at room temperature
Insulation Resistance	500 VDC and 5000 Megohms min. at room temperature

Mechanical Properties	
Engaging Force	6 oz max. at room temperature
Separation Force	.5 oz min. at room temperature
Mating/Unmating Force	10 oz x # of contacts max.at room temperature
Vibration	EIA-364-28 Condition IV, 1 microsecond max discontinuity at room temperature
Shock	EIA-364-27 Condition E, 1 microsecond max discontinuity at room temperature
Durability	500 matings, passes Mating Force, CR, Eng and Sep Forces at room temperature
Salt Spray	EIA 364-26 Condition B-48 hours at room temperature

HARDWARE

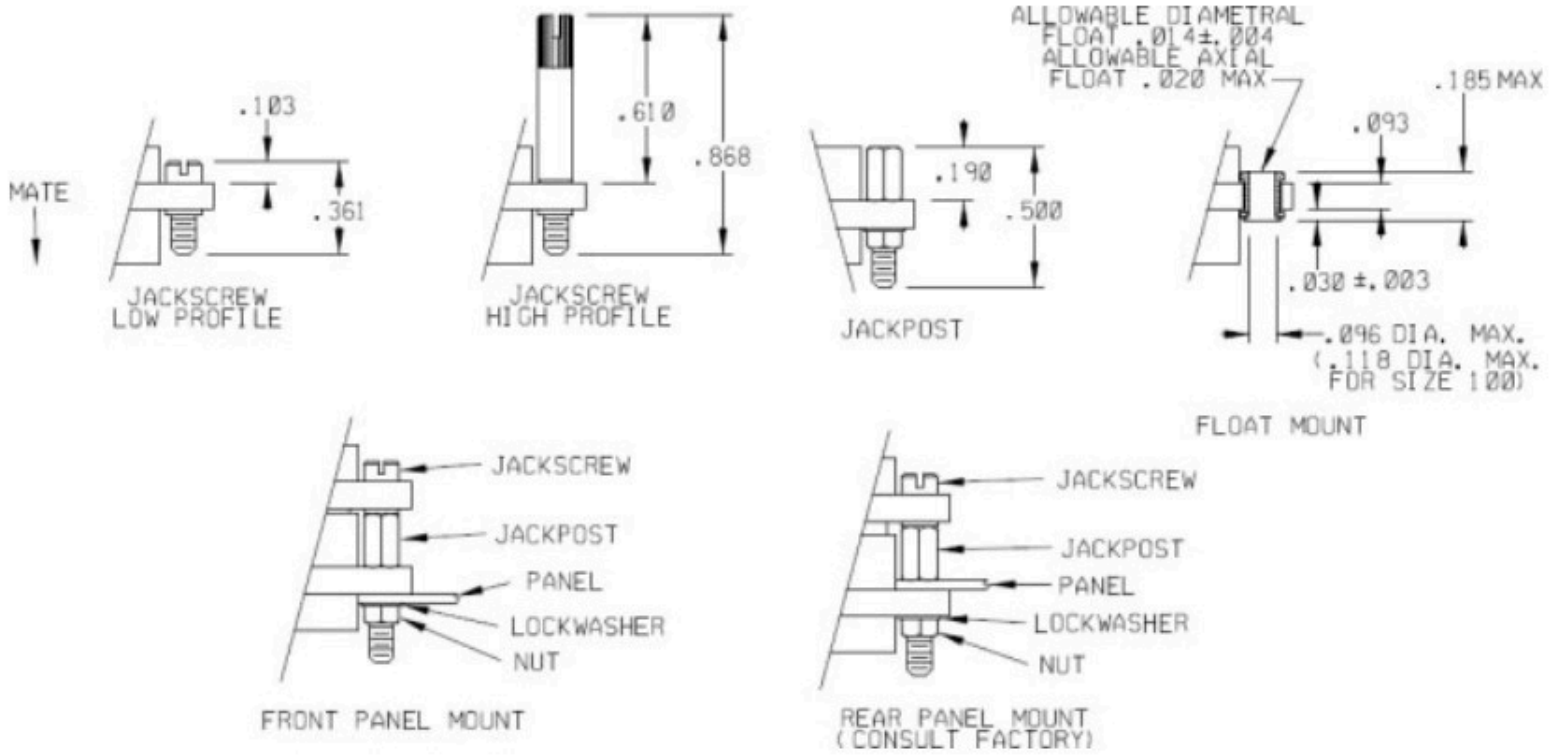

Winchester Interconnect.

MATERIALS

Materials and Finishes	
Signal Pin Contacts	C17200 Beryllium Copper per ASTM B194
Signal Socket Contacts	C31400 Bronze Alloy per ASTM B140
Contact Plating	.000050 Thk Gold Plating per ASTM B488
Shell	6061-T6 Aluminum per SAE-AMS-QQ-A200/8 or Passivated 300 Series Stainless Steel
Shell Plating	Electroless Nickel per AMS 2404 or Cadmium Plated per SAE-AMS-QQ-P-416
Insulator Material	Polyphenylene Sulfide (PPS) Per MIL-M-24519 GST-40F
Hardware	Passivated Stainless Steel Per MIL-DTL-83513/05
Interfacial Seals	Fluorosilicone per MIL-R-25988 Std Profile Receptacles only)

HOW TO ORDER

M R E 09 P 07 - 26 E 5 - 18.0 - RPM - 0.062 - S01 - F01 - HT - 1 0 0 SPL

Connector Type
M = Metal Shell, Standard Profile
B = Plastic Shell, Standard Profile
A = Metal Shell, Low Profile, Receptacle
AP = Metal Shell, Low Profile, Plug
P = Plastic Shell, Low Profile

Insulator Material
R = PPS

Integral EMI Shell
(Omit if EMI shell not required)
(Only available with standard profile metal shell (M))

Size (No. of Contacts)
09, 15, 21, 25, 31, 37, 51-3, 65, 69, & 100

Contact Gender & Type
P = Pin, Crimp Type
N = Pin, Solder Cup (26 & 24 AWG)
S = Socket, Crimp Type
T = Socket, Solder Cup (26 AWG)
TT = Socket, Solder Cup (24 AWG)

Hardware
0 = No Hardware
02 = Low Profile Hex Head Jackscrew (12 for size 100)
03 = High Profile Hex Head Jackscrew (13 for size 100)
05 = Low Profile Slotted Head Jackscrew (15 for size 100)
06 = High Profile Slotted Head Jackscrew (16 for size 100)
07 = Jackposts (17 for size 100)
22 = Captive Low Profile Hex Head Jackscrews
23 = Captive High Profile Hex Head Jackscrews
0T = Threaded Inserts (2-56) in Flange
07T = Threaded inserts and jackposts (17T for size 100)
0F = Float Mount hardware
0G = Guide pins
0GB = Guide Bushings
0R = Retractable low profile jackscrews, allen head

Wire Gauge (Omit for Solder Cup Contacts)
24, 26, 28, & 30 AWG
(25 AWG is available with type C solid wire)

Wire Type (Omit for Solder Cup Contacts)
C = Solid Wire, Uninsulated Per A-A-59551
E = Stranded Wire, NEMA HP3 Type E
F = Stranded Wire Per NEMA HP3 Type ET
M = Stranded Wire per AS22759/11
U = Stranded Wire per AS22759/12
Y = Stranded Wire per AS22759/33
B = Stranded Wire, PVC Insulated (This wire is no longer used. Does not meet maximum temperature and epoxy adhesion requirement)

Wire Color (Insulated Wire) **or Plating** (Uninsulated Wire) (Omit for Solder Cup Contacts)
1 = All White
2 = All Yellow
3 = Pure Tin Plated (Uninsulated Wire) (RoHS Compliant)
4 = Gold Plated (Uninsulated Wire) (RoHS Compliant)
5 = Color Code per MIL-STD-681
6 = Color Code per MIL-STD-681, Repeat Solid Colors
L = Tin/Lead Plated (minimum 3% Lead) (Uninsulated Wire) (Not RoHS Compliant) (Not Available with high temp (HT) connectors)

Lead Length (Omit for Solder Cup contacts)
XX.X = Length in Inches
MXX = Metric Length (CM)

Panel Mount Options (Omit if panel mounting not required)
(Only available on standard profile metal shells)
RPM = Rear Panel Mount
FPM = Front Panel Mount
RPMS = Rear Panel Mount, Sealed w/O-ring
FPMS = Front Panel Mount, Sealed w/O-ring
RPMSC = Rear Panel Mount, Sealed w/Conductive O-ring
FPMSC = Front Panel Mount, Sealed w/Conductive O-ring

Panel Thickness (Omit if panel mounting not required) (Thickness in inches)
Available for .031, .047, .062, .080, .094, .125 thick panels
(Consult Factory for additional Panel Thicknesses)

Shell Plating or Material (Omit for plastic shell or cadmium plating)
Blank = Cadmium
S01 = Electroless Nickel
S02 = Chem Film
S03 = Black Anodized
S04 = Gold
S05 = Titanium
S06 = Olive-Drab Cadmium
S07 = Black Nickel
S08 = Nickel-PTFE
S09 = Stainless Steel, Passivated
S10 = Zinc Nickel

Float Mount Hardware (Omit if float mounts not required)
(This designation is no longer used. Use 0F in hardware position to specify float mount hardware.)

Temperature Rating (Omit for standard Temp, 125°C)
Blank = 125°C
HT = 200°C
LO = 4 Kelvin (only available with solder cup contacts)

Cable Exit Angle
1 = Straight
2 = 90° toward short row side
3 = 90° toward long row side
4 = 45° toward short row side
5 = 45° toward long row side

Inner Shield
0 = No Shield
1 = Tin Plated Copper
2 = Nickel Plated Copper
3 = Silver Plated Copper

Outer Covering
0 = None
1 = M23053/5 Shrink Tubing
2 = M23053/18 Shrink Tubing
3 = Nomex Braid
4 = Expando Plastic Braid

(Omit if EMI shell not required)

Special designator - SPL is to be added to the end of the part number if the connector cannot be fully defined by the rest of the engineering number

** For double ended assemblies, include connector definition for both ends separated by a forward slash (/)
Excludes integral Shell assemblies (Option "E")

Winchester Interconnect.

Ulti-Mate Connectors

Ulti-Mate Micro-D Soldercup

Low Profile Plastic Shell Connectors

Winchester Interconnect Micro offers Low Profile Plastic Shell Solder Cup Connectors designed for high performance and environmental sealing. These reliable connectors feature solder cup contacts within a durable plastic shell and operate from −55°C to +125°C, with high-temperature versions available up to +200°C (HT). Available in 9 to 51 contact configurations for 24 AWG wire, they use C17200 Beryllium Copper signal pins, C31400 Bronze Alloy sockets, and .000050 Thk Gold plating for superior conductivity.

KEY FEATURES & BENEFITS

- Low Profile Design – Compact plastic shell ideal for space-constrained applications.
- Environmentally Sealed – Ensures reliable performance in harsh environments.
- Wide Temperature Range – Operates from −55°C to +125°C; HT versions up to +200°C.
- Flexible Contact Options – Available with 9–51 contacts accepting 24 AWG wire.
- High-Quality Materials – C17200 Beryllium Copper pins and C31400 Bronze sockets.
- Gold-Plated Contacts – .000050 Thk Gold per ASTM B488 for superior conductivity.
- Durable Plastic Shell – Lightweight, robust design for versatile applications.
- Reliable Electrical Performance – Designed for precision and long-term dependability.

DIMENSIONAL

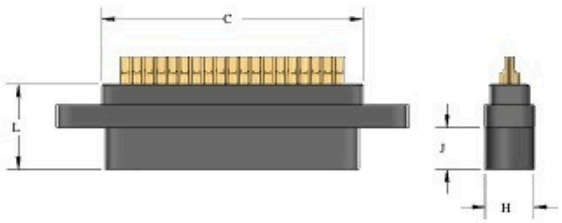

RECEPTACLE (SOCKETS)

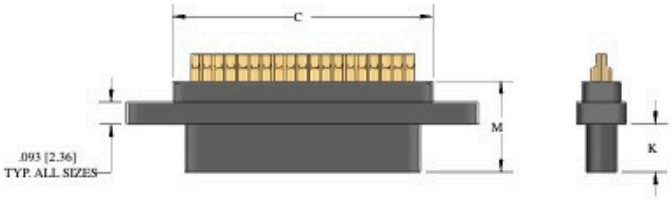

PLUG (PINS)

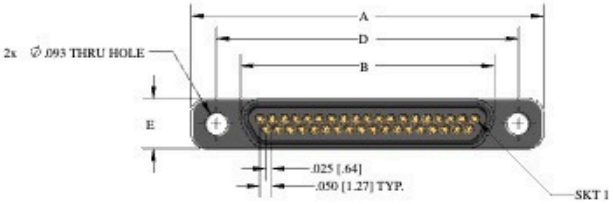

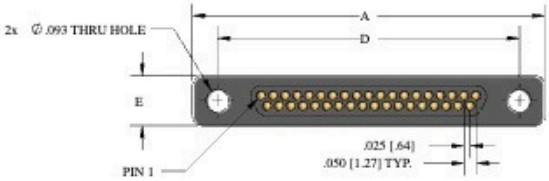

Size	A Max.	B Max.	C Max.	D Nom.	E Max.	J Max.(Skt)	L Max.(Skt)	M Max.(Pin)
	ALL	A&P Series						
9	.785(19.94)	.376(9.55)	.395(9.98)	.565(14.35)	.218(5.54)	.182(4.62)	.375(9.57)	.395(10.03)
15	.935(23.75)	.526(13.36)	.545(13.79)	.715(18.16)	.218(5.54)	.182(4.62)	.375(9.57)	.395(10.03)
21	1.085(27.56)	.693(17.17)	.695(17.60)	.865(21.97)	.218(5.54)	.182(4.62)	.375(9.57)	.395(10.03)
25	1.185(30.10)	.776(19.71)	.795(20.14)	.965(24.51)	.218(5.54)	.182(4.62)	.375(9.57)	.395(10.03)
31	1.335(33.91)	.926(23.52)	.945(23.95)	1.115(28.32)	.218(5.54)	.182(4.62)	.375(9.57)	.395(10.03)
37	1.485(37.72)	1.076(27.33)	1.095(27.76)	1.265(32.13)	.218(5.54)	.182(4.62)	.375(9.57)	.395(10.03)
51-3	1.435(36.45)	1.026(26.06)	1.045(26.44)	1.215(30.86)	.254(6.45)	.182(4.62)	.375(9.57)	.395(10.03)

Winchester Interconnect.

PANEL

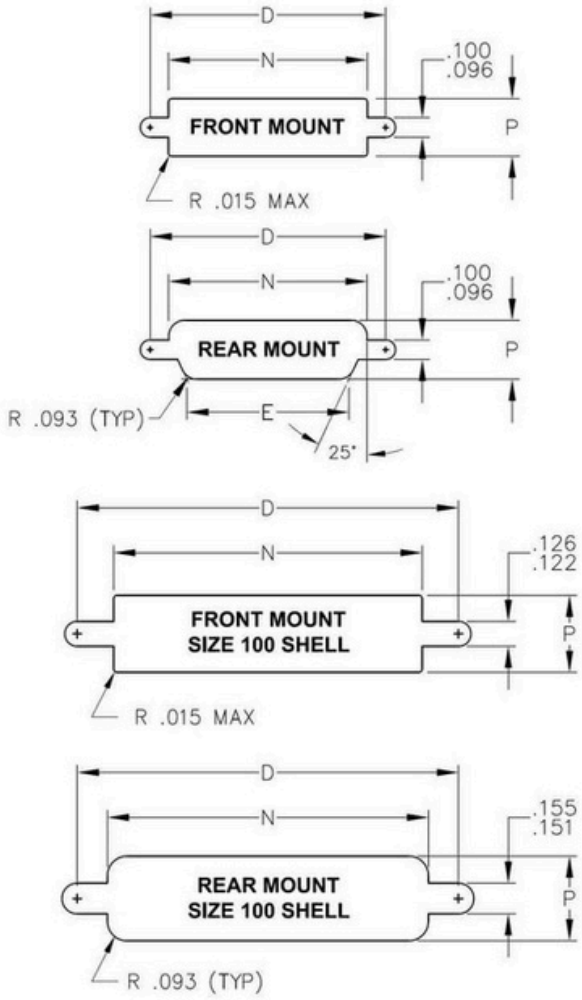

Panel Cut-Out Dimensions					
	ALL	N		P	
Size	D	Front Mount	Rear Mount	Front Mount	Rear Mount
9	.565	.400	.405	.280	.265
15	.715	.550	.555	.280	.265
21	.865	.700	.705	.280	.265
25	.965	.800	.805	.280	.265
31	1.115	.950	.955	.280	.265
37	1.265	1.100	1.105	.280	.265
51-3	1.215	1.046	1.057	.320	.305

PERFORMANCE

Electrical Properties	
Contact Resistance	8 milliohm max contact only and 32 millohms max with 6" wire @ 2.5A at room temperature
Current Rating	3A max. at room temperature
Dielectric WithStanding Voltage	600 VAC at sea level, 150 VAC at 70,000 feet. 1mA leakage current max. at room temperature
Insulation Resistance	500 VDC and 5000 Megohms min. at room temperature

Mechanical Properties	
Engaging Force	6 oz max.
Separation Force	.5 oz min.
Mating/Unmating Force	10 oz x # of contacts max.
Vibration	EIA-364-28 Condition IV, 1 microsecond max discontinuity
Shock	EIA-364-27 Condition E, 1 microsecond max discontinuity
Durability	500 matings, passes Mating Force, CR, Eng and Sep Forces

HARDWARE

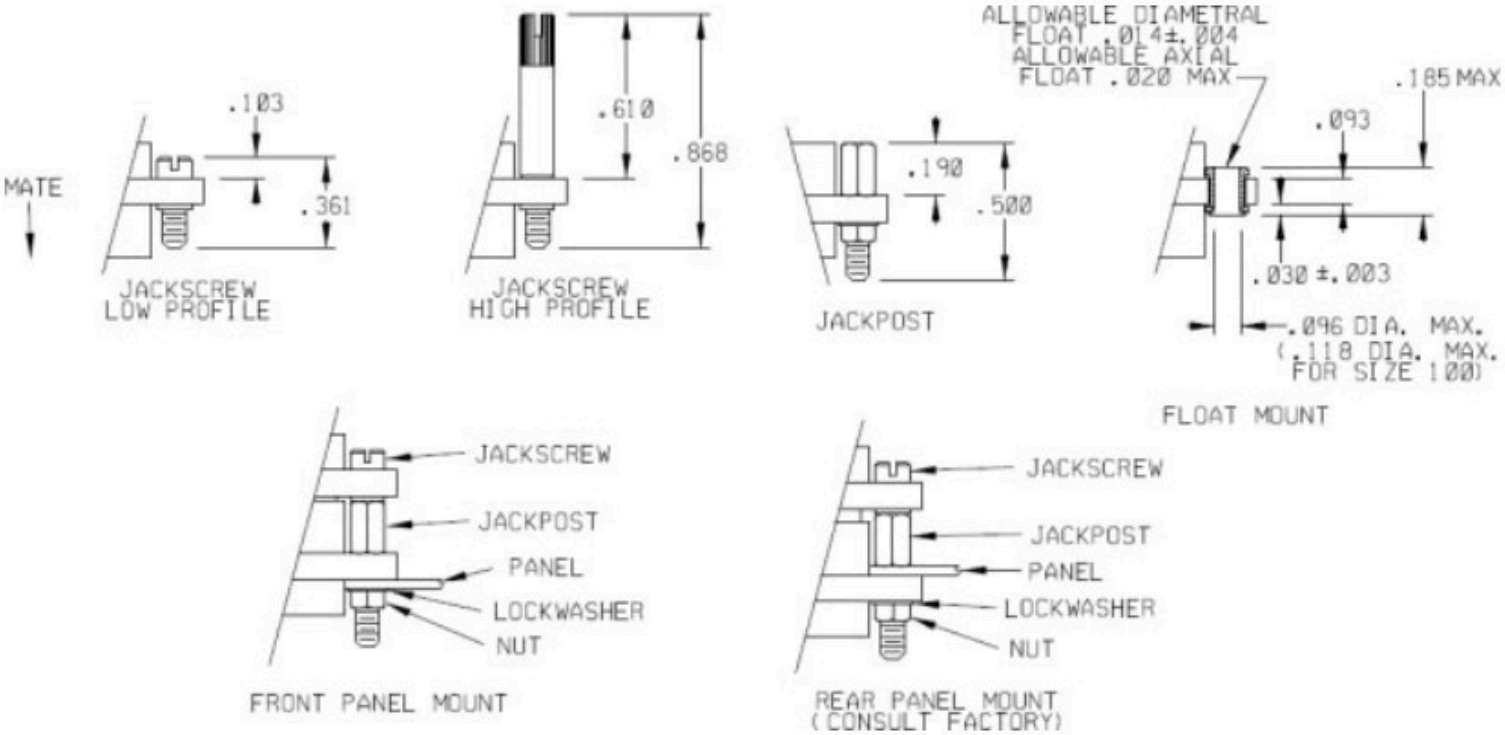

Winchester Interconnect.

MATERIALS

Materials and Finishes	
Signal Pin Contacts	C17200 Beryllium Copper per ASTM B194
Signal Socket Contacts	C31400 Bronze Alloy per ASTM B140
Contact Plating	.000050 Thk Gold Plating per ASTM B488
Shell	Polyphenylene Sulfide (PPS) Per MIL-M-24519 GST-40F
Insulator Material	Polyphenylene Sulfide (PPS) Per MIL-M-24519 GST-40F
Hardware	Passivated Stainless Steel Per MIL-DTL-83513/05

HOW TO ORDER

M R E 09 P 07 - 26 E 5 - 18.0 - RPM - 0.062 - S01 - F01 - HT - 1 0 0 SPL

Connector Type
M = Metal Shell, Standard Profile
B = Plastic Shell, Standard Profile
A = Metal Shell, Low Profile, Receptacle
AP = Metal Shell, Low Profile, Plug
P = Plastic Shell, Low Profile

Insulator Material
R = PPS

Integral EMI Shell
(Omit if EMI shell not required)
(Only available with standard profile metal shell (M))

Size (No. of Contacts)
09, 15, 21, 25, 31, 37, 51-3, 65, 69, & 100

Contact Gender & Type
P = Pin, Crimp Type
N = Pin, Solder Cup (26 & 24 AWG)
S = Socket, Crimp Type
T = Socket, Solder Cup (26 AWG)
TT = Socket, Solder Cup (24 AWG)

Hardware
0 = No Hardware
02 = Low Profile Hex Head Jackscrew (12 for size 100)
03 = High Profile Hex Head Jackscrew (13 for size 100)
05 = Low Profile Slotted Head Jackscrew (15 for size 100)
06 = High Profile Slotted Head Jackscrew (16 for size 100)
07 = Jackposts (17 for size 100)
22 = Captive Low Profile Hex Head Jackscrews
23 = Captive High Profile Hex Head Jackscrews
0T = Threaded Inserts (2-56) in Flange
07T = Threaded inserts and jackposts (17T for size 100)
0F = Float Mount hardware
0G = Guide pins
0GB = Guide Bushings
0R = Retractable low profile jackscrews, allen head

Wire Gauge (Omit for Solder Cup Contacts)
24, 26, 28, & 30 AWG
(25 AWG is available with type C solid wire)

Wire Type (Omit for Solder Cup Contacts)
C = Solid Wire, Uninsulated Per A-A-59551
E = Stranded Wire, NEMA HP3 Type E
F = Stranded Wire Per NEMA HP3 Type ET
M = Stranded Wire per AS22759/11
U = Stranded Wire per AS22759/12
Y = Stranded Wire per AS22759/33
B = Stranded Wire, PVC Insulated (This wire is no longer used. Does not meet maximum temperature and epoxy adhesion requirement)

Wire Color (Insulated Wire) **or Plating** (Uninsulated Wire) (Omit for Solder Cup Contacts)
1 = All White
2 = All Yellow
3 = Pure Tin Plated (Uninsulated Wire) (RoHS Compliant)
4 = Gold Plated (Uninsulated Wire) (RoHS Compliant)
5 = Color Code per MIL-STD-681
6 = Color Code per MIL-STD-681, Repeat Solid Colors
L = Tin/Lead Plated (minimum 3% Lead) (Uninsulated Wire) (Not RoHS Compliant) (Not Available with high temp (HT) connectors)

Lead Length (Omit for Solder Cup contacts)
XX.X = Length in inches
MXX = Metric Length (CM)

Panel Mount Options (Omit if panel mounting not required)
(Only available on standard profile metal shells)
RPM = Rear Panel Mount
FPM = Front Panel Mount
RPMS = Rear Panel Mount, Sealed w/O-ring
FPMS = Front Panel Mount, Sealed w/O-ring
RPMSC = Rear Panel Mount, Sealed w/Conductive O-ring
FPMSC = Front Panel Mount, Sealed w/Conductive O-ring

Panel Thickness (Omit if panel mounting not required) (Thickness in inches)
Available for .031, .047, .062, .080, .094, .125 thick panels
(Consult Factory for additional Panel Thicknesses)

Shell Plating or Material (Omit for plastic shell or cadmium plating)
Blank = Cadmium
S01 = Electroless Nickel
S02 = Chem Film
S03 = Black Anodized
S04 = Gold
S05 = Titanium
S06 = Olive-Drab Cadmium
S07 = Black Nickel
S08 = Nickel-PTFE
S09 = Stainless Steel, Passivated
S10 = Zinc Nickel

Float Mount Hardware (Omit if float mounts not required)
(This designation is no longer used. Use 0F in hardware position to specify float mount hardware.)

Temperature Rating (Omit for standard Temp, 125°C)
Blank = 125°C
HT = 200°C
LO = 4 Kelvin (only available with solder cup contacts)

Cable Exit Angle
1 = Straight
2 = 90° toward short row side
3 = 90° toward long row side
4 = 45° toward short row side
5 = 45° toward long row side

Inner Shield
0 = No Shield
1 = Tin Plated Copper
2 = Nickel Plated Copper
3 = Silver Plated Copper

Outer Covering
0 = None
1 = M23053/5 Shrink Tubing
2 = M23053/18 Shrink Tubing
3 = Nomex Braid
4 = Expando Plastic Braid

(Omit if EMI shell not required)

Special designator - SPL is to be added to the end of the part number if the connector cannot be fully defined by the rest of the engineering number

Connector definition **

** For double ended assemblies, include connector definition for both ends separated by a forward slash (/)
Excludes integral Shell assemblies (Option "E")

Winchester Interconnect

Ulti-Mate Connectors

Ulti-Mate Micro-D Soldercup

Standard Profile Metal Shell Cryo Temp Connectors

Winchester Interconnect Micro offers Micro-D Cryogenic Temperature Solder Cup Connectors designed for soldering to superconducting wires such as NbTi CuNi clad, manganin, and others. Based on the M83513 specification, these connectors use a special epoxy rated for cryogenic service down to 4 Kelvin. Operating within a temperature range of 4 K (−269.15°C) to +121°C, they provide exceptional reliability for quantum computing and other cryogenic applications. Available with 9 to 100 contacts.

KEY FEATURES & BENEFITS

- Cryogenic Rated Design – Operates from 4 K (−269.15°C) to +121°C for extreme environments.
- Special Epoxy Formula – Ensures reliability and performance at cryogenic temperatures.
- M83513-Based Construction – Built on the proven Micro-D specification for consistency.
- Supports Superconducting Wires – Ideal for NbTi CuNi clad, manganin, and similar materials.
- Broad Application Use – Suitable for quantum computing and cryogenic systems.
- Multiple Contact Options – Available with 9 to 100 solder cup contacts for design flexibility.
- Reliable Performance – Maintains mechanical and electrical integrity at ultra-low temperatures.

Winchester Interconnect.

DIMENSIONAL

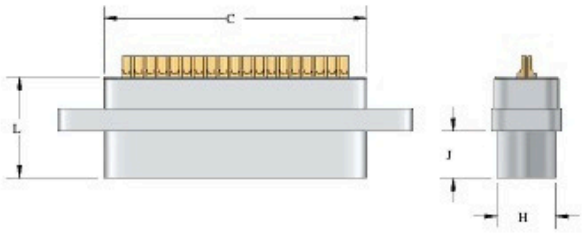

RECEPTACLE (SOCKETS)

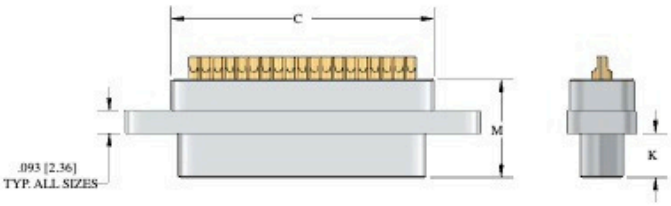

PLUG (PINS)

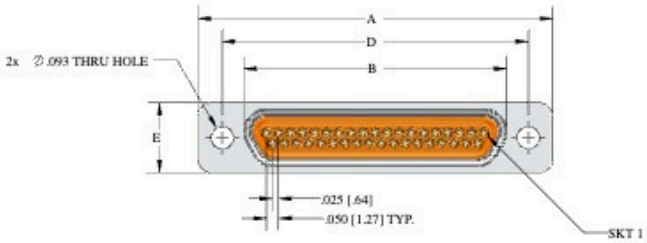

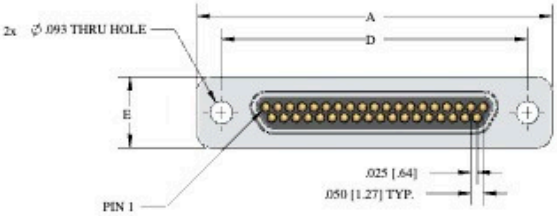

Size	A Max.	B Max.	C Max.	D Nom.	H Max.	E Max.	J Max.(Skt)	K Max. (Pin)
	ALL	M&B Series						
9	.785(19.94)	.402(10.21)	.390(9.98)	.565(14.35)	.248(6.30)	.308(7.83)	.199(5.05)	.187(4.75)
15	.935(23.75)	.552(14.02)	.540(13.79)	.715(18.16)	.248(6.30)	.308(7.83)	.199(5.05)	.187(4.75)
21	1.085(27.56)	.702(17.83)	.690(17.60)	.865(21.47)	.248(6.30)	.308(7.83)	.199(5.05)	.187(4.75)
25	1.185(30.10)	.802(20.37)	.790(20.14)	.965(24.51)	.248(6.30)	.308(7.83)	.199(5.05)	.187(4.75)
31	1.335(33.91)	.952(24.18)	.940(23.95)	1.115(28.32)	.248(6.30)	.308(7.83)	.199(5.05)	.187(4.75)
37	1.485(37.72)	1.102(27.99)	1.090(27.76)	1.265(32.13)	.248(6.30)	.308(7.83)	.199(5.05)	.187(4.75)
51	1.435(36.45)	1.054(26.77)	1.040(26.44)	1.215(30.86)	.297(7.54)	.351(8.92)	.199(5.05)	.187(4.75)
100	2.165(54.99)	1.505(38.23)	1.432(36.63)	1.800(45.72)	.394(10.00)	.394(10.00)	.199(5.05)	.187(4.75)

Winchester Interconnect.

PANEL

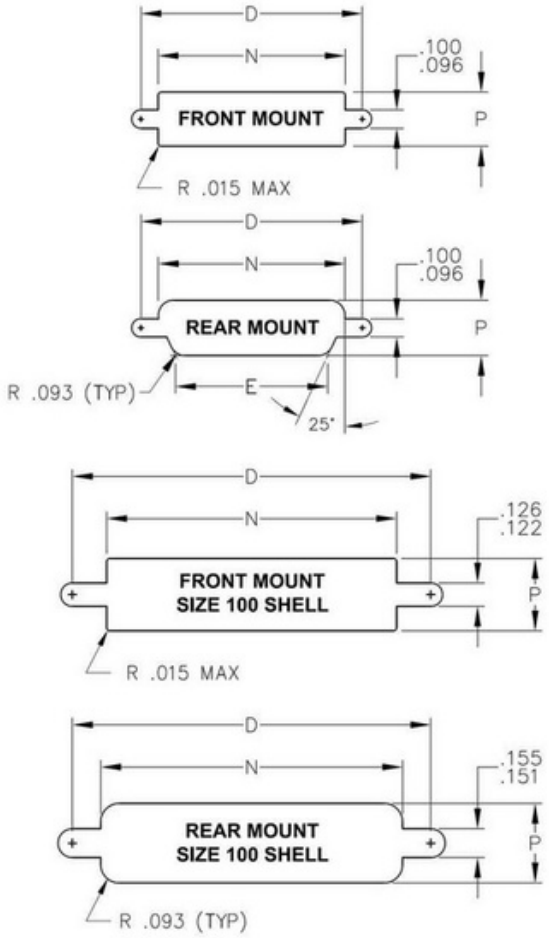

Panel Cut-Out Dimensions					
	ALL	N		P	
Size	D	Front Mount	Rear Mount	Front Mount	Rear Mount
9	.565	.400	.405	.280	.265
15	.715	.550	.555	.280	.265
21	.865	.700	.705	.280	.265
25	.965	.800	.805	.280	.265
31	1.115	.950	.955	.280	.265
37	1.265	1.100	1.105	.280	.265
51-3	1.215	1.046	1.057	.320	.305
100	1.800	1.445	1.506	.402	.402

PERFORMANCE

Electrical Properties	
Contact Resistance	8 milliohm max contact only and 32 millohms max with 6" wire @ 2.5A at room temperature
Current Rating	3A max. at room temperature
Dielectric WithStanding Voltage	600 VAC at sea level, 150 VAC at 70,000 feet. 1mA leakage current max. at room temperature
Insulation Resistance	500 VDC and 5000 Megohms min. at room temperature

Mechanical Properties	
Engaging Force	6 oz max. at room temperature
Separation Force	.5 oz min. at room temperature
Mating/Unmating Force	10 oz x # of contacts max.at room temperature
Vibration	EIA-364-28 Condition IV, 1 microsecond max discontinuity at room temperature
Shock	EIA-364-27 Condition E, 1 microsecond max discontinuity at room temperature
Durability	500 matings, passes Mating Force, CR, Eng and Sep Forces at room temperature
Salt Spray	EIA 364-26 Condition B-48 hours at room temperature

HARDWARE

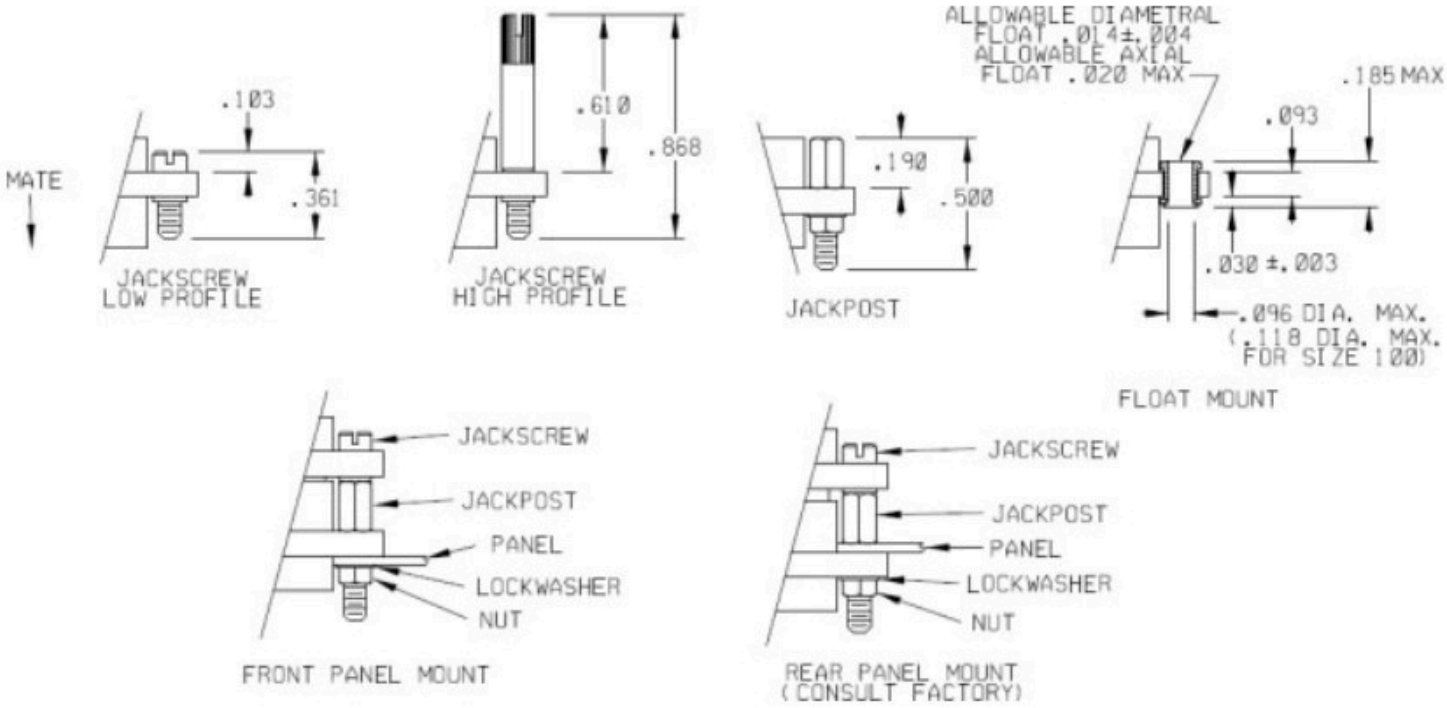

Winchester Interconnect.

MATERIALS

Materials and Finishes	
Signal Pin Contacts	C17200 Beryllium Copper per ASTM B194
Signal Socket Contacts	C31400 Bronze Alloy per ASTM B140
Contact Plating	.000050 Thk Gold Plating per ASTM B488
Shell	6061-T6 Aluminum per SAE-AMS-QQ-A200/8 or Passivated 300 Series Stainless Steel
Shell Plating	Electroless Nickel per AMS 2404 or Cadmium Plated per SAE-AMS-QQ-P-416
Insulator Material	Polyphenylene Sulfide (PPS) Per MIL-M-24519 GST-40F
Hardware	Passivated Stainless Steel Per MIL-DTL-83513/05
Interfacial Seals	Fluorosilicone per MIL-R-25988 Std Profile Receptacles only)

HOW TO ORDER

M R E 09 P 07 - 26 E 5 - 18.0 - RPM - 0.062 - S01 - F01 - HT - 1 0 0 SPL

Connector definition **

Connector Type
M = Metal Shell, Standard Profile
B = Plastic Shell, Standard Profile
A = Metal Shell, Low Profile, Receptacle
AP = Metal Shell, Low Profile, Plug
P = Plastic Shell, Low Profile

Insulator Material
R = PPS

Integral EMI Shell
(Omit if EMI shell not required)
(Only available with standard profile metal shell (M))

Size (No. of Contacts)
09, 15, 21, 25, 31, 37, 51-3, 65, 69, & 100

Contact Gender & Type
P = Pin, Crimp Type
N = Pin, Solder Cup (26 & 24 AWG)
S = Socket, Crimp Type
T = Socket, Solder Cup (26 AWG)
TT = Socket, Solder Cup (24 AWG)

Hardware
0 = No Hardware
02 = Low Profile Hex Head Jackscrew (12 for size 100)
03 = High Profile Hex Head Jackscrew (13 for size 100)
05 = Low Profile Slotted Head Jackscrew (15 for size 100)
06 = High Profile Slotted Head Jackscrew (16 for size 100)
07 = Jackposts (17 for size 100)
22 = Captive Low Profile Hex Head Jackscrews
23 = Captive High Profile Hex Head Jackscrews
0T = Threaded Inserts (2-56) in Flange
07T = Threaded inserts and jackposts (17T for size 100)
0F = Float Mount hardware
0G = Guide pins
0GB = Guide Bushings
0R = Retractable low profile jackscrews, allen head

Wire Gauge (Omit for Solder Cup Contacts)
24, 26, 28, & 30 AWG
(25 AWG is available with type C solid wire)

Wire Type (Omit for Solder Cup Contacts)
C = Solid Wire, Uninsulated Per A-A-59551
E = Stranded Wire, NEMA HP3 Type E
F = Stranded Wire Per NEMA HP3 Type ET
M = Stranded Wire per AS22759/11
U = Stranded Wire per AS22759/12
Y = Stranded Wire per AS22759/33
B = Stranded Wire, PVC Insulated (This wire is no longer used. Does not meet maximum temperature and epoxy adhesion requirement)

Wire Color (Insulated Wire) **or Plating** (Uninsulated Wire) (Omit for Solder Cup Contacts)
1 = All White
2 = All Yellow
3 = Pure Tin Plated (Uninsulated Wire) (RoHS Compliant)
4 = Gold Plated (Uninsulated Wire) (RoHS Compliant)
5 = Color Code per MIL-STD-681
6 = Color Code per MIL-STD-681, Repeat Solid Colors
L = Tin/Lead Plated (minimum 3% Lead) (Uninsulated Wire) (Not RoHS Compliant) (Not Available with high temp (HT) connectors)

Lead Length (Omit for Solder Cup contacts)
XX.X = Length in inches
MXX = Metric Length (CM)

Panel Mount Options (Omit if panel mounting not required)
(Only available on standard profile metal shells)
RPM = Rear Panel Mount
FPM = Front Panel Mount
RPMS = Rear Panel Mount, Sealed w/O-ring
FPMS = Front Panel Mount, Sealed w/O-ring
RPMSC = Rear Panel Mount, Sealed w/Conductive O-ring
FPMSC = Front Panel Mount, Sealed w/Conductive O-ring

Panel Thickness (Omit if panel mounting not required) (Thickness in inches)
Available for .031, .047, .062, .080, .094, .125 thick panels
(Consult Factory for additional Panel Thicknesses)

Shell Plating or Material (Omit for plastic shell or cadmium plating)
Blank = Cadmium
S01 = Electroless Nickel
S02 = Chem Film
S03 = Black Anodized
S04 = Gold
S05 = Titanium
S06 = Olive-Drab Cadmium
S07 = Black Nickel
S08 = Nickel-PTFE
S09 = Stainless Steel, Passivated
S10 = Zinc Nickel

Float Mount Hardware (Omit if float mounts not required)
(This designation is no longer used. Use 0F in hardware position to specify float mount hardware.)

Temperature Rating (Omit for standard Temp, 125°C)
Blank = 125°C
HT = 200°C
LO = 4 Kelvin (only available with solder cup contacts)

Cable Exit Angle
1 = Straight
2 = 90° toward short row side
3 = 90° toward long row side
4 = 45° toward short row side
5 = 45° toward long row side

Inner Shield
0 = No Shield
1 = Tin Plated Copper
2 = Nickel Plated Copper
3 = Silver Plated Copper

Outer Covering
0 = None
1 = M23053/5 Shrink Tubing
2 = M23053/18 Shrink Tubing
3 = Nomex Braid
4 = Expando Plastic Braid

(Omit if EMI shell not required)

Special designator - SPL is to be added to the end of the part number if the connector cannot be fully defined by the rest of the engineering number

** For double ended assemblies, include connector definition for both ends separated by a forward slash (/)
Excludes integral Shell assemblies (Option "E")

Winchester Interconnect

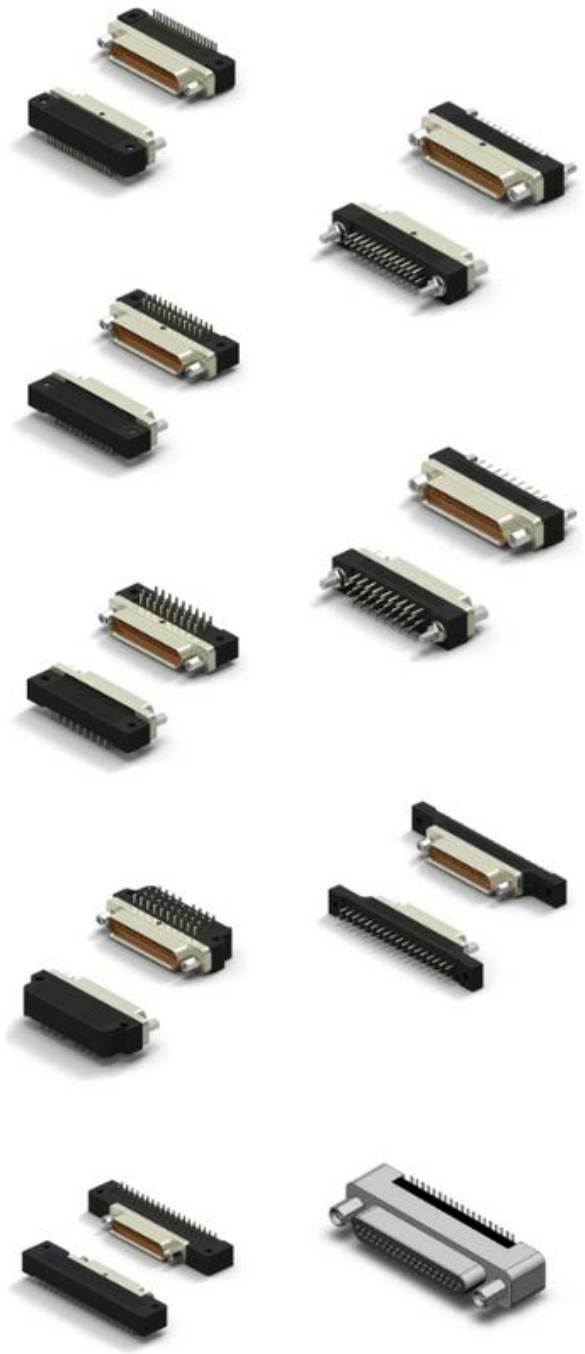

Micro-D PCB

Winchester Interconnect™

Ulti-Mate Connectors

Ulti-Mate Micro-D PCB

Right Angle .100 X .100 (Style 1) Connectors

Winchester Interconnect Micro offers Right Angle .100 x .100 (Style 1) Connectors designed for a variety of PCB applications. This Style 1 (CBR) connector is a reliable, condensed right-angle mount with 90° termination exit leads on a .100 x .100 grid. It features mounting thru holes with optional jackposts for jackscrews and meets MIL-DTL-83513 slash sheets 10–15 for the "M" series.

KEY FEATURES & BENEFITS

- Condensed Right-Angle Design – 90° termination exit leads on a .100 x .100 grid.
- Mounting Versatility – Thru holes and optional jackposts for jackscrew use.
- MIL-DTL-83513 Qualified – Complies with slash sheets 10–15 for the "M" series.
- Low Contact Resistance – 8 milliohms max for efficient power transmission.
- High Current Capacity – Rated up to 3A max at room temperature.
- Strong Electrical Integrity – 600 VAC at sea level, 150 VAC at 70,000 ft dielectric withstand.
- Reliable Insulation – 5000 MΩ minimum at 500 VDC for consistent performance.
- Rugged and Proven – Ensures long-term reliability in demanding PCB applications.

Micro-D PCB Right Angle .100 X .100 (Style 1)

DIMENSIONAL

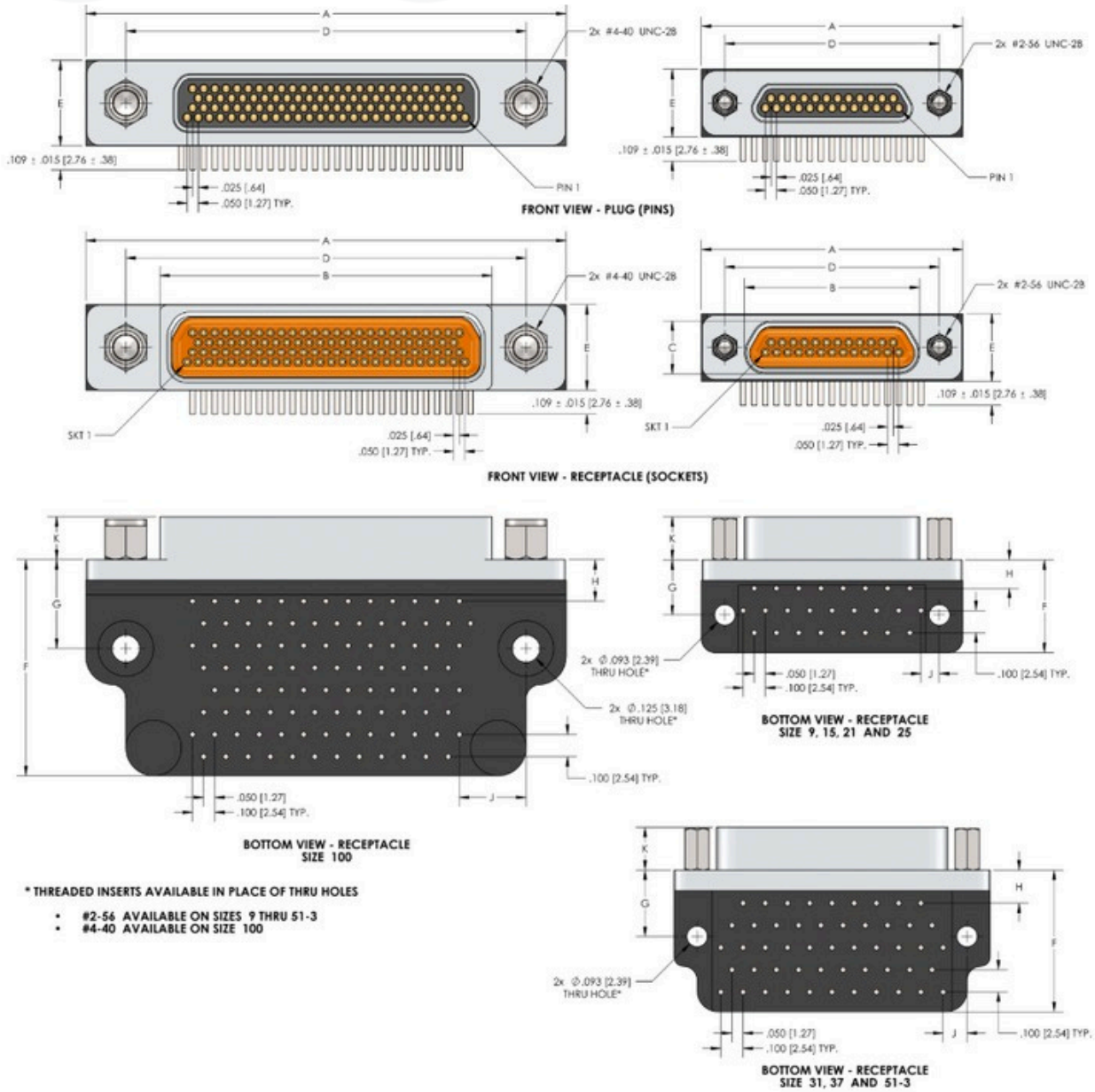

* THREADED INSERTS AVAILABLE IN PLACE OF THRU HOLES

- #2-56 AVAILABLE ON SIZES 9 THRU 51-3
- #4-40 AVAILABLE ON SIZE 100

Size	A Max.	D +/- .005	E Max./ M & B	E Max. / A & P	F Max.	G +/- .010	H +/- .010	J +/- .005
9	.785 (19.94)	.565 (14.35)	.310 (7.87)	.218 (5.54)	.425 (10.80)	.250 (6.35)	.230 (5.84)	.083 (2.11)
15	.935 (23.75)	.715 (18.16)	.310 (7.87)	.218 (5.54)	.425 (10.80)	.250 (6.35)	.130 (3.30)	.108 (2.74)
21	1.085 (27.56)	.865 (21.97)	.310 (7.87)	.218 (5.54)	.425 (10.80)	.250 (6.35)	.130 (3.30)	.083 (2.11)
25	1.185 (30.10)	.965 (24.51)	.310 (7.87)	.218 (5.54)	.425 (10.80)	.250 (6.35)	.130 (3.30)	.083 (2.11)
31	1.335 (33.91)	1.115 (28.32)	.310 (7.87)	.218 (5.54)	.525 (13.34)	.250 (6.35)	.130 (3.30)	.158 (4.01)
37	1.485 (37.72)	1.265 (32.13)	.310 (7.87)	.218 (5.54)	.525 (13.34)	.250 (6.35)	.130 (3.30)	.183 (4.65)
51-3	1.435 (36.45)	1.215 (30.86)	.351(8.92)	.260 (6.60)	.660 (16.76)	.300 (7.62)	.150 (3.81)	.108 (2.74)
100	2.165 (54.99)	1.800 (45.72)	.394 (10.01)	N/A	1.010 (25.65)	.400 (10.16)	.200 (5.08)	.275 (6.98)

PERFORMANCE

Electrical Properties	
Contact Resistance	8 millihom max contact only + any solid lead resistance (depends on wire AWG) @ 2.5A
Current Rating	3A max.
Dielectric WithStanding Voltage	600 VAC at sea level, 150 VAC at 70,000 feet. 1mA leakage current max.
Insulation Resistance	500 VDC and 5000 Megohms min.

Mechanical Properties	
Engaging Force	6 oz max. (Signal contacts only, no data for Power or Coax contacts)
Separation Force	.5 oz. min. (Signal contacts only, no data for Power or Coax contacts)
Mating/Unmating Force	10 oz x # of contacts max. (Signal contacts only, no data for Power or Coax contacts)
Vibration	EIA-364-28 Condition IV, 1 microsecond max discontinuity
Shock	EIA-364-27 Condition E, 1 microsecond max discontinuity
Durability	500 matings, passes Mating Force, CR, Eng and Sep Forces
Salt Spray	EIA 364-26 Condition B-48 hours

MATERIALS

Materials and Finishes	
Signal Pin Contacts	C17200 Beryllium Copper per ASTM B194
Signal Socket Contacts	C21000 Brass Alloy per ASTM B36
Contact Plating	.000050 Thk Gold Plating per ASTM B488
PC Tails	Copper Wire per A-A-59551 Type S
PC Tail Plating	.000320 min thk Tin plating per ASTM B545, or .000300 min thk Tin/Lead with minimum 3% lead plating per SAE-AMS-P-81728, or .000010 thk Gold plating per ASTM B488
Shell	6061-T6 Aluminum per SAE-AMS-QQ-A200/8 or Passivated 300 Series Stainless Steel
Shell Plating	Electroless Nickel per AMS 2404 or Cadmium Plated per SAE-AMS-QQ-P-416
Insulator Material	Polyphenylene Sulfide (PPS) Per MIL-M-24519 GST-40F
Hardware	Passivated Stainless Steel Per MIL-DTL-83513/05
Interfacial Seals	Fluorosilicone per MIL-R-25988 (Std Profile Receptacles only)

HOW TO ORDER

C M 1 R 25 P 07 T - 24 C 4 - 0.140 - RPM - 0.062 - S01 HT SPL

Micro-D Circuit Series

Shell Material & Profile
M = Metal Shell, Std Profile
B = Plastic Shell, Std Profile
A = Metal Shell, Low Profile, Recept.
AP = Metal Shell, Low Profile, Plug
P = Plastic Shell, Low Profile

Backshell Style/Grid Pattern
1 = Right Angle (Horizontal) .100 X .100

Insulator Material
R = PPS

Size (No. of Contacts)
09, 15, 21, 25, 31, 37, 51-3, & 100

Contact Gender & Type
P = Pin, Crimp Type
S = Socket, Crimp Type

Hardware
0 = No Hardware
07 = Jackposts (17 for size 100)
27 = Helicoil in Flange

Threaded Insert (Omit if threaded insert not requried)
T = Threaded Insert in Backshell

Wire Gauge
24*, 25, 26, & 30

Wire Type
C = Solid Wire*

Wire Plating
3 = Pure Tin Plated (RoHS Compliant)*
4 = Gold (.000050 min.) Plated (RoHS Compliant)
5 = Gold (.000010 min.) Plated (RoHS Compliant)
L = Tin/Lead (minimum 3% Lead) Plated (Non-RoHS)
(Not available with high temp (HT) connectors)

Lead Length (in inches)
Blank = 0.109*
Other Lengths = 0.140, 0.172
(Consult Factory for additional lengths)

Panel Mount Options (Omit if panel mounting not required)
(Only available on standard profile metal shells)
RPM = Rear Panel Mount
RPMS = Rear Panel Mount, Sealed w/O-ring
RPMSC = Rear Panel Mount, Sealed w/Conductive O-ring

Panel Thickness (Omit if panel mounting not required) (Thickness in inches)
Available for .031, .047, .062, .080, .094, .125 thick panels
(Consult Factory for additional Panel Thicknesses)

Shell Plating or Material (Omit for plastic shell or cadmium plating)
Blank = Cadmium
S01 = Electroless Nickel
S02 = Chem Film
S03 = Black Anodized
S04 = Gold
S05 = Titanium
S06 = Olive-Drab Cadmium
S07 = Black Nickel
S08 = Nickel-PTFE
S09 = Stainless Steel, Passivated
S10 = Zinc Nickel

Temperature Rating (Omit for standard Temp, 125°C)
Blank = 125°C
HT = 200°C

Special designator - SPL is to be added to the end of the part number if the connector cannot be fully defined by the rest of the engineering number

*For 24 AWG, Pure Tin Plated, 0.109 Length Leads this section of the part number may be omitted

Winchester Interconnect.

Ulti-Mate Connectors

Ulti-Mate Micro-D PCB

Right Angle .050 X .100 (Style 2) Connectors

Winchester Interconnect Micro, formerly known as Ulti-Mate Connector, offers Right Angle .050 x .100 (Style 2) Connectors – a ruggedized replacement for commercial Micro-D right-angle plugs. Designed with a machined metal shell and epoxy-sealed potting well, these connectors provide enhanced durability and contact retention. With a 3A max current rating and 8 milliohms max contact resistance, they deliver reliable performance in demanding environments. Ideal for mission-critical interconnect applications where reliability and precision are essential.

KEY FEATURES & BENEFITS

- Ruggedized Design – Machined metal shell ensures superior mechanical strength.
- Epoxy-Sealed Potting Well – Provides excellent environmental sealing and strain relief.
- Reliable Electrical Performance – 3A max current rating and 8 mΩ contact resistance.
- High Voltage Capability – Withstands 600 VAC at sea level and 150 VAC at 70,000 ft.
- MIL-DTL-83513 Compatibility – Meets stringent Micro-D performance standards.
- Compact Right-Angle Profile – Saves space in dense electronic assemblies.
- Enhanced Contact Retention – Prevents loosening under vibration or stress.
- Proven Dependability – Designed for high-reliability aerospace and defense systems.
- Customizable Options – Available in multiple contact counts and configurations.

DIMENSIONAL

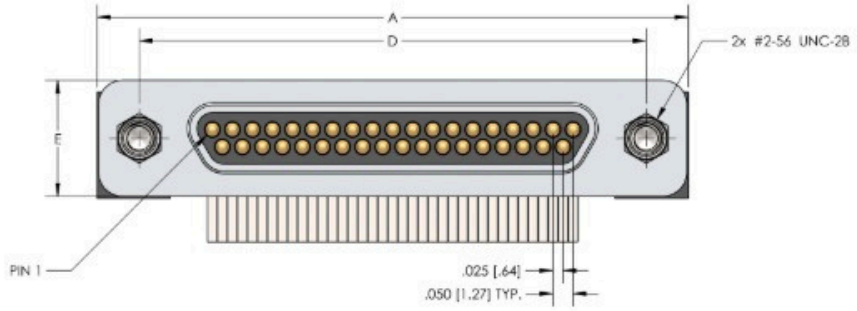

FRONT VIEW - PLUG (PINS)

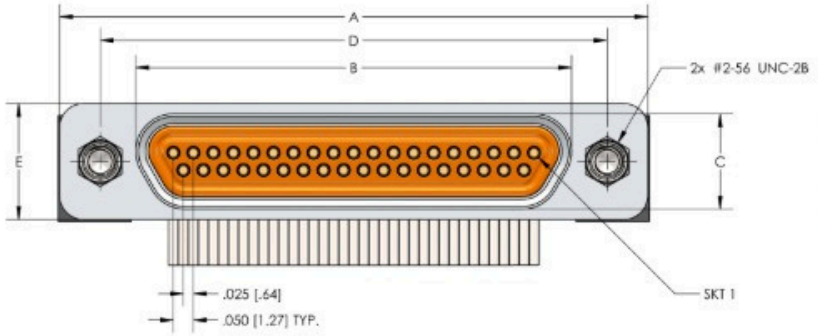

FRONT VIEW - RECEPTACLE (SOCKETS)

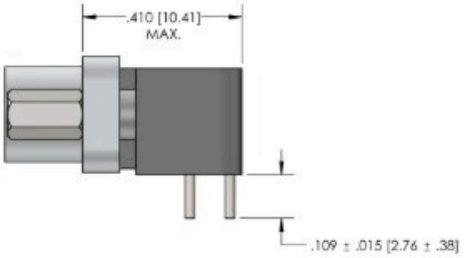

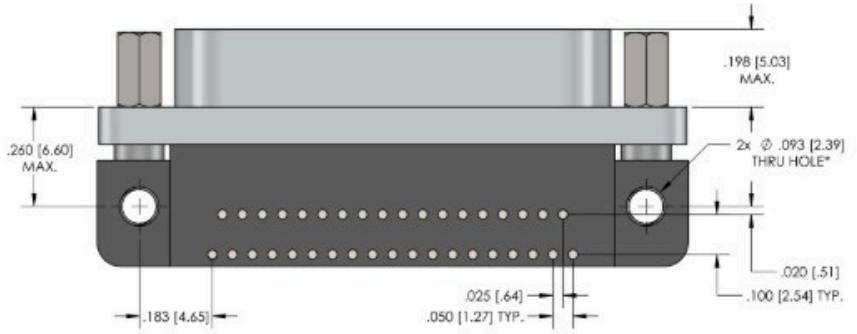

BOTTOM VIEW - RECEPTACLE
SIZE 9 THRU 37

*#2-56 THREADED INSERTS AVAILABLE IN PLACE OF THRU HOLES

NOTE: SHELL MAY BE GROUNDED THROUGH CHASIS OR PC BOARD

Winchester Interconnect.

PERFORMANCE

Electrical Properties	
Contact Resistance	8 millihom max contact only + any solid lead resistance (depends on wire AWG) @ 2.5A
Current Rating	3A max.
Dielectric WithStanding Voltage	600 VAC at sea level, 150 VAC at 70,000 feet. 1mA leakage current max.
Insulation Resistance	500 VDC and 5000 Megohms min.

Mechanical Properties	
Engaging Force	6 oz max. (Signal contacts only, no data for Power or Coax contacts)
Separation Force	.5 oz. min. (Signal contacts only, no data for Power or Coax contacts)
Mating/Unmating Force	10 oz x # of contacts max. (Signal contacts only, no data for Power or Coax contacts)
Vibration	EIA-364-28 Condition IV, 1 microsecond max discontinuity
Shock	EIA-364-27 Condition E, 1 microsecond max discontinuity
Durability	500 matings, passes Mating Force, CR, Eng and Sep Forces
Salt Spray	EIA 364-26 Condition B-48 hours

MATERIALS

Materials and Finishes	
Signal Pin Contacts	C17200 Beryllium Copper per ASTM B194
Signal Socket Contacts	C21000 Brass Alloy per ASTM B36
Contact Plating	.000050 Thk Gold Plating per ASTM B488
PC Tails	Copper Wire per A-A-59551 Type S
PC Tail Plating	.000320 min thk Tin plating per ASTM B545, or .000300 min thk Tin/Lead with minimum 3% lead plating per SAE-AMS-P-81728, or .000010 thk Gold plating per ASTM B488
Shell	6061-T6 Aluminum per SAE-AMS-QQ-A200/8 or Passivated 300 Series Stainless Steel
Shell Plating	Electroless Nickel per AMS 2404 or Cadmium Plated per SAE-AMS-QQ-P-416
Insulator Material	Polyphenylene Sulfide (PPS) Per MIL-M-24519 GST-40F
Hardware	Passivated Stainless Steel Per MIL-DTL-83513/05
Interfacial Seals	Fluorosilicone per MIL-R-25988 (Std Profile Receptacles only)

HOW TO ORDER

C M 2 R 25 P 07 T 24 C 4 0.140 - RPM 0.062 - S01 - HT SPL

Micro-D Circuit Series

Shell Material
M = Metal Shell, Std Profile
B = Plastic Shell, Std Profile

Backshell Style/Grid Pattern
2 = Right Angle (Horizontal) .100 X .050

Insulator Material
R = PPS

Size (No. of Contacts)
09, 15, 21, 25, 31, & 37

Contact Gender & Type
P = Pin, Crimp Type
S = Socket, Crimp Type

Hardware
0 = No Hardware
07 = Jackposts
27 = Helicoil in Flange

Threaded Insert (Omit if threaded insert not requried)
T = Threaded Insert in Backshell

Wire Gauge
24*, 25, 26, & 30

Wire Type
C = Solid Wire*

Wire Plating
3 = Pure Tin Plated (RoHS Compliant)*
4 = Gold (.000050 min.) Plated (RoHS Compliant)
5 = Gold (.000010 min.) Plated (RoHS Compliant)
L = Tin/Lead (minimum 3% Lead) Plated (Non-RoHS)
(Not available with high temp (HT) connectors)

Lead Length (in inches)
Blank = 0.109*
Other Lengths = 0.140, 0.172
(Consult Factory for additional lengths)

Panel Mount Options (Omit if panel mounting not required)
(Only available on standard profile metal shells)
RPM = Rear Panel Mount
RPMS = Rear Panel Mount, Sealed w/O-ring
RPMSC = Rear Panel Mount, Sealed w/Conductive O-ring

Panel Thickness (Omit if panel mounting not required) (Thickness in inches)
Available for .031, .047, .062, .080, .094, .125 thick panels
(Consult Factory for additional Panel Thicknesses)

Shell Plating or Material (Omit for plastic shell or cadmium plating)
Blank = Cadmium
S01 = Electroless Nickel
S02 = Chem Film
S03 = Black Anodized
S04 = Gold
S05 = Titanium
S06 = Olive-Drab Cadmium
S07 = Black Nickel
S08 = Nickel-PTFE
S09 = Stainless Steel, Passivated
S10 = Zinc Nickel

Temperature Rating (Omit for standard Temp, 125°C)
Blank = 125°C
HT = 200°C

Special designator - SPL is to be added to the end of the part number if the connector cannot be fully defined by the rest of the engineering number

*For 24 AWG, Pure Tin Plated, 0.109 Length Leads this section of the part number may be omitted

Winchester Interconnect.

Ulti-Mate Connectors

Ulti-Mate Micro-D PCB

Right Angle .100X .100 (Style 5) Connectors

Winchester Interconnect Micro offers Right Angle .100 X .100 (Style 5) Connectors. Our Style 5 (BR) is a right-angle circuit board connector with exit leads on a .100 x .100 grid, sharing the same footprint as Style 4. These quality connectors include mounting thru-holes and jackposts for coupling and adhere to slash sheets 16 through 21 of MIL-DTL-83513, exclusively for the "M" series. For applications requiring a denser footprint, Style 8 with a .075 grid is recommended.

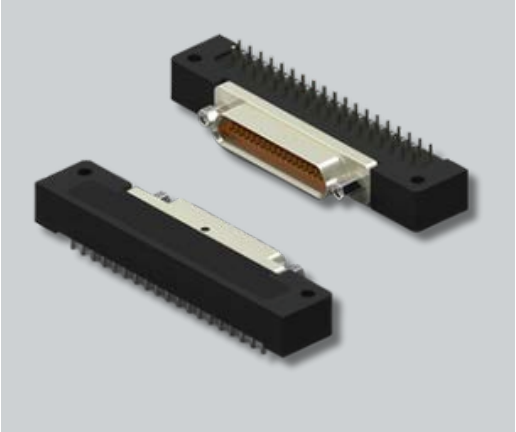

KEY FEATURES & BENEFITS

- Right-Angle Circuit Board Connector – Exit leads on a .100 x .100 grid.
- Compatible Footprint – Shares the same layout as Style 4.
- Mounting Thru-Holes and Jackposts – Provides secure coupling.
- MIL-DTL-83513 Compliant – Meets slash sheets 16–21 for the "M" series.
- Low Contact Resistance – 8 milliohm maximum at 2.5A.
- High Current Rating – 3A maximum at room temperature.
- Dielectric Strength – 600 VAC at sea level and 150 VAC at 70,000 feet.
- Leakage Current – Maximum 1mA at room temperature.
- High Insulation Resistance – 500 VDC, minimum 5000 Megohms.
- Denser Footprint Option – Style 8 (.075 grid) recommended for tighter layouts.

Micro-D PCB Right Angle .100 X .100 (Style 5)

DIMENSIONAL

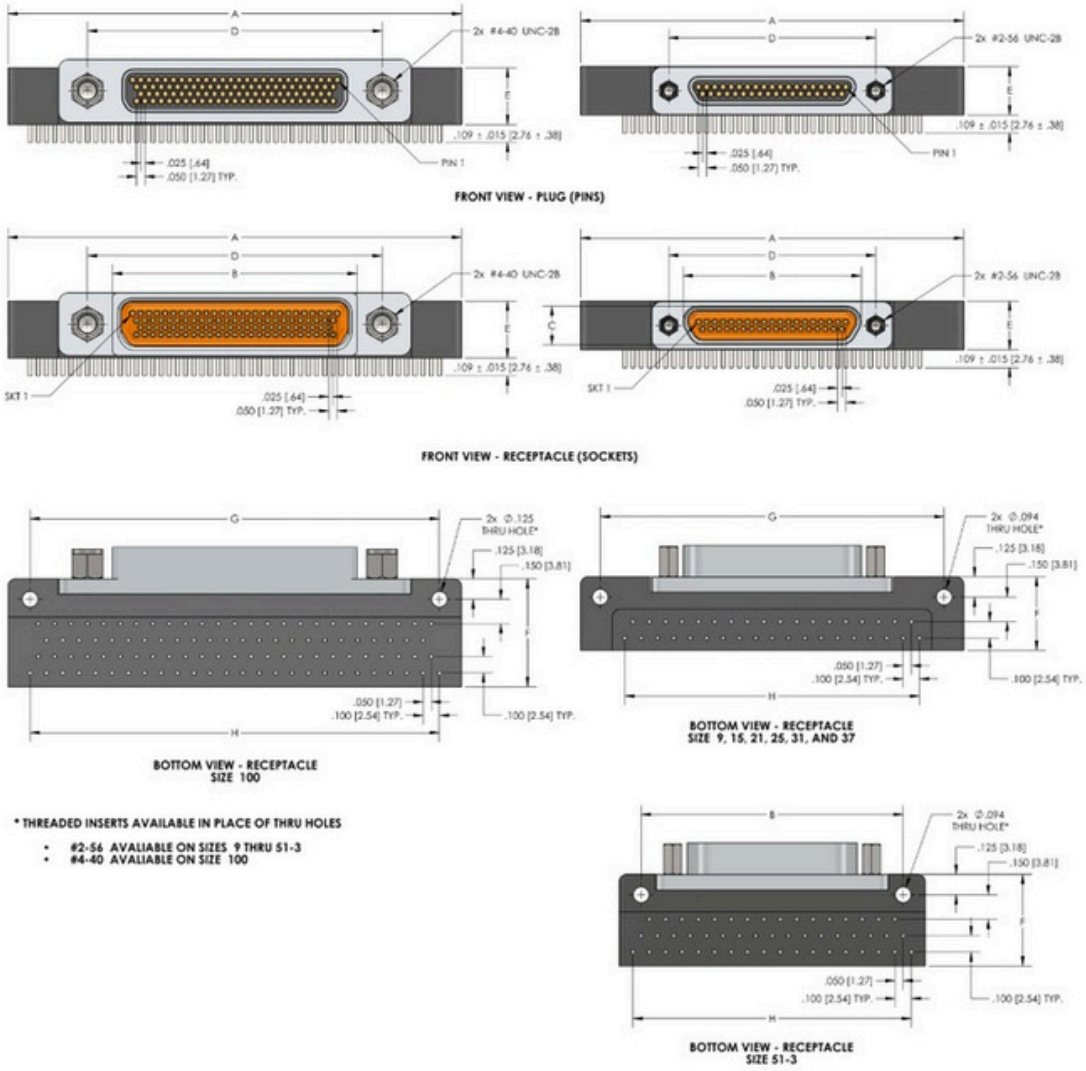

Size	A Max.	B +/- .007	C +/- .005	D Ref.	E Max. / M & B	E Max. / A & P	F Max.
9	1.390 (35.31)	1.150 (29.21)	.565 (14.35)	.400 (10.16)	.308 (7.82)	.218 (5.54)	.455 (11.56)
15	1.540 (39.12)	1.300 (33.02)	.715 (18.16)	.700 (17.78)	.308 (7.82)	.218 (5.54)	.455 (11.56)
21	1.690 (42.93)	1.450 (36.83)	.865 (21.97)	1.000 (25.40)	.308 (7.82)	.218 (5.54)	.455 (11.56)
25	1.790 (45.47)	1.550 (39.37)	.965 (24.51)	1.200 (30.48)	.308 (7.82)	.218 (5.54)	.455 (11.56)
31	2.040 (51.82)	1.800 (45.72)	1.115 (28.32)	1.500 (38.10)	.308 (7.82)	.218 (5.54)	.455 (11.56)
37	2.340 (59.44)	2.100 (53.34)	1.265 (32.13)	1.800 (45.72)	.308 (7.82)	.218 (5.54)	.455 (11.56)
51-3	1.875 (47.63)	1.600 (40.64)	1.215 (30.86)	1.700 (43.18)	.351 (8.92)	.260 (6.60)	.565 (14.35)
100	2.780 (70.61)	2.500 (63.50)	1.800 (45.72)	2.500 (63.50)	.420(10.67)	N/A	.665 (16.89)

PERFORMANCE

Electrical Properties	
Contact Resistance	8 millihom max contact only + any solid lead resistance (depends on wire AWG) @ 2.5A
Current Rating	3A max.
Dielectric WithStanding Voltage	600 VAC at sea level, 150 VAC at 70,000 feet. 1mA leakage current max.
Insulation Resistance	500 VDC and 5000 Megohms min.

Mechanical Properties	
Engaging Force	6 oz max. (Signal contacts only, no data for Power or Coax contacts)
Separation Force	.5 oz. min. (Signal contacts only, no data for Power or Coax contacts)
Mating/Unmating Force	10 oz x # of contacts max. (Signal contacts only, no data for Power or Coax contacts)
Vibration	EIA-364-28 Condition IV, 1 microsecond max discontinuity
Shock	EIA-364-27 Condition E, 1 microsecond max discontinuity
Durability	500 matings, passes Mating Force, CR, Eng and Sep Forces
Salt Spray	EIA 364-26 Condition B-48 hours

MATERIALS

Materials and Finishes	
Signal Pin Contacts	C17200 Beryllium Copper per ASTM B194
Signal Socket Contacts	C21000 Brass Alloy per ASTM B36
Contact Plating	.000050 Thk Gold Plating per ASTM B488
PC Tails	Copper Wire per A-A-59551 Type S
PC Tail Plating	.000320 min thk Tin plating per ASTM B545, or .000300 min thk Tin/Lead with minimum 3% lead plating per SAE-AMS-P-81728, or .000010 thk Gold plating per ASTM B488
Shell	6061-T6 Aluminum per SAE-AMS-QQ-A200/8 or Passivated 300 Series Stainless Steel
Shell Plating	Electroless Nickel per AMS 2404 or Cadmium Plated per SAE-AMS-QQ-P-416
Insulator Material	Polyphenylene Sulfide (PPS) Per MIL-M-24519 GST-40F
Hardware	Passivated Stainless Steel Per MIL-DTL-83513/05
Interfacial Seals	Fluorosilicone per MIL-R-25988 (Std Profile Receptacles only)

HOW TO ORDER

C M 5 R 25 P 07 T 24 C 4 0.140 RPM - 0.062 S01 HT SPL

Micro-D Circuit Series

Shell Material & Profile
M = Metal Shell, Std Profile
B = Plastic Shell, Std Profile
A = Metal Shell, Low Profile, Recept.
AP = Metal Shell, Low Profile, Plug
P = Plastic Shell, Low Profile

Backshell Style/Grid Pattern
5 = Right Angle (Horizontal) .100 X .100

Insulator Material
R = PPS

Size (No. of Contacts)
09, 15, 21, 25, 31, 37, 51-3, & 100

Contact Gender & Type
P = Pin, Crimp Type
S = Socket, Crimp Type

Hardware
0 = No Hardware
07 = Jackposts (17 for size 100)
27 = Helicoil in Flange

Threaded Insert (Omit if threaded insert not requried)
T = Threaded Insert in Backshell

Wire Gauge
24*, 25, 26, & 30

Wire Type
C = Solid Wire*

Wire Plating
3 = Pure Tin Plated (RoHS Compliant)*
4 = Gold (.000050 min.) Plated (RoHS Compliant)
5 = Gold (.000010 min.) Plated (RoHS Compliant)
L = Tin/Lead (minimum 3% Lead) Plated (Non-RoHS)
(Not available with high temp (HT) connectors)

Lead Length (in inches)
Blank = 0.109*
Other Lengths = 0.140, 0.172
(Consult Factory for additional lengths)

Panel Mount Options (Omit if panel mounting not required)
(Only available on standard profile metal shells)
RPM = Rear Panel Mount
RPMS = Rear Panel Mount, Sealed w/O-ring
RPMSC = Rear Panel Mount, Sealed w/Conductive O-ring

Panel Thickness (Omit if panel mounting not required) (Thickness in inches)
Available for .031, .047, .062, .080, .094, .125 thick panels
(Consult Factory for additional Panel Thicknesses)

Shell Plating or Material (Omit for plastic shell or cadmium plating)
Blank = Cadmium
S01 = Electroless Nickel
S02 = Chem Film
S03 = Black Anodized
S04 = Gold
S05 = Titanium
S06 = Olive-Drab Cadmium
S07 = Black Nickel
S08 = Nickel-PTFE
S09 = Stainless Steel, Passivated
S10 = Zinc Nickel

Temperature Rating (Omit for standard Temp, 125°C)
Blank = 125°C
HT = 200°C

Special designator - SPL is to be added to the end of the part number if the connector cannot be fully defined by the rest of the engineering number

*For 24 AWG, Pure Tin Plated, 0.109 Length Leads this section of the part number may be omitted

Winchester Interconnect.

Ulti-Mate Connectors

ULTI-MATE MICRO-D PCB

Vertical Angle .075 X .100 (Style 6) Connectors

Winchester Interconnect Micro offers Vertical Angle .100 X .075 (Style 6) Connectors. Style 6 is a condensed footprint vertical connector designed to fit circuit board applications. Sharing the same condensed footprint as Style 16, it is recommended for new designs over the older Style 4 (BS). The termination footprints are contained within the connector body envelope, providing optimal space savings. Spacing between rows is 0.075 on all layouts, and spacing between contacts in any one row is 0.100 on the 9– 37 layouts and 0.075 on the 51 and 100 layouts.

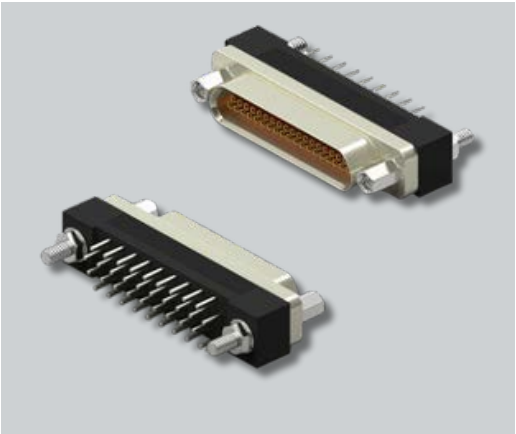

KEY FEATURES & BENEFITS

- Condensed Vertical Design – Optimized for circuit board applications.
- Space-Saving Footprint – Terminations contained within the connector body.
- Modern Replacement – Recommended for new designs over Style 4 (BS).
- Uniform Spacing – 0.075 between rows; 0.100 (9–37) and 0.075 (51–100) between contacts.
- Compact Configuration – Ideal for high-density interconnect solutions.
- Reliable Performance – Ensures consistent connection integrity in critical systems.

Winchester Interconnect.

DIMENSIONAL

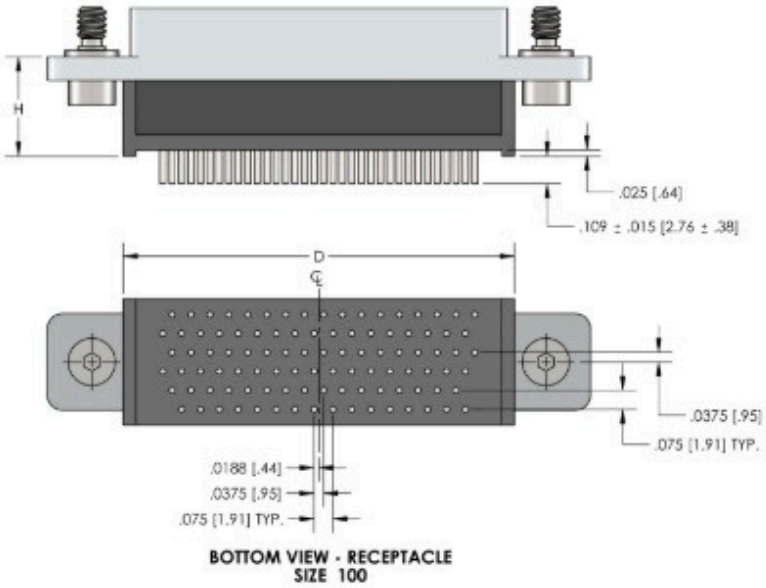

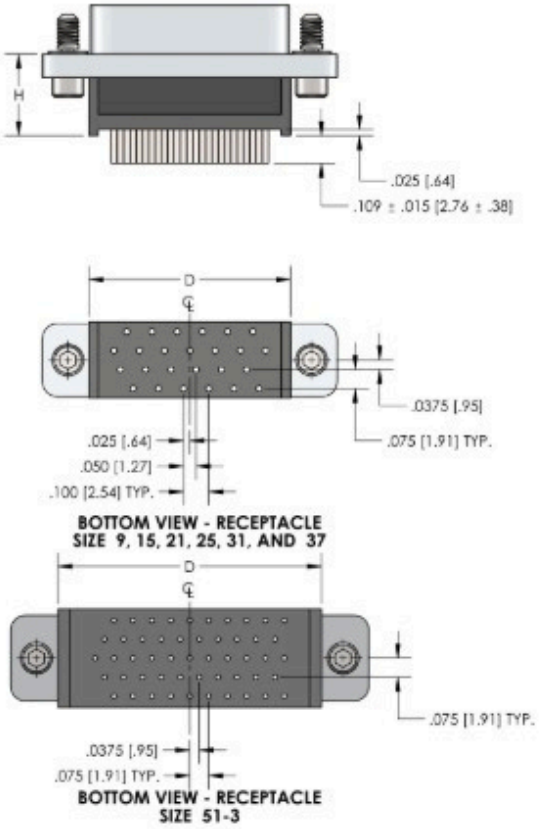

Size	A Max.	B Nom.	C Max.	E Max.	F Max.	H Max.
9	.785 (19.94)	.565 (14.35)	.400 (10.16)	.308 (7.82)	.310 (7.87)	.330 (8.38)
15	.935 (23.75)	.715 (18.16)	.550 (13.97)	.308 (7.82)	.310 (7.87)	.330 (8.38)
21	1.085 (27.56)	.865 (21.97)	.700 (17.78)	.308 (7.82)	.310 (7.87)	.330 (8.38)
25	1.185 (30.10)	.965 (24.51)	.800 (20.32)	.308 (7.82)	.310 (7.87)	.330 (8.38)
31	1.335 (33.91)	1.115 (28.32)	.950 (24.13)	.308 (7.82)	.310 (7.87)	.330 (8.38)
37	1.485 (37.72)	1.265 (32.13)	1.100 (27.94)	.308 (7.82)	.310 (7.87)	.330 (8.38)
51-3	1.435 (36.45)	1.215 (30.86)	1.045 (26.54)	.308 (7.82)	.400 (10.16)	.345 (8.76)
100	2.165 (54.99)	1.800 (45.72)	1.550 (39.37)	.394 (10.01)	.510 (12.95)	.400 (10.16)

Winchester Interconnect.

PERFORMANCE

Electrical Properties	
Contact Resistance	8 millihom max contact only + any solid lead resistance (depends on wire AWG) @ 2.5A
Current Rating	3A max.
Dielectric WithStanding Voltage	600 VAC at sea level, 150 VAC at 70,000 feet. 1mA leakage current max.
Insulation Resistance	500 VDC and 5000 Megohms min.

Mechanical Properties	
Engaging Force	6 oz max. (Signal contacts only, no data for Power or Coax contacts)
Separation Force	.5 oz. min. (Signal contacts only, no data for Power or Coax contacts)
Mating/Unmating Force	10 oz x # of contacts max. (Signal contacts only, no data for Power or Coax contacts)
Vibration	EIA-364-28 Condition IV, 1 microsecond max discontinuity
Shock	EIA-364-27 Condition E, 1 microsecond max discontinuity
Durability	500 matings, passes Mating Force, CR, Eng and Sep Forces
Salt Spray	EIA 364-26 Condition B-48 hours

MATERIALS

Materials and Finishes	
Signal Pin Contacts	C17200 Beryllium Copper per ASTM B194
Signal Socket Contacts	C21000 Brass Alloy per ASTM B36
Contact Plating	.000050 Thk Gold Plating per ASTM B488
PC Tails	Copper Wire per A-A-59551 Type S
PC Tail Plating	.000320 min thk Tin plating per ASTM B545, or .000300 min thk Tin/Lead with minimum 3% lead plating per SAE-AMS-P-81728, or .000010 thk Gold plating per ASTM B488
Shell	6061-T6 Aluminum per SAE-AMS-QQ-A200/8 or Passivated 300 Series Stainless Steel
Shell Plating	Electroless Nickel per AMS 2404 or Cadmium Plated per SAE-AMS-QQ-P-416
Insulator Material	Polyphenylene Sulfide (PPS) Per MIL-M-24519 GST-40F
Hardware	Passivated Stainless Steel Per MIL-DTL-83513/05
Interfacial Seals	Fluorosilicone per MIL-R-25988 (Std Profile Receptacles only)

HOW TO ORDER

C M 6 R 25 P 07 T - 24 C 4 - 0.140 - RPM - 0.062 - S01 HT SPL

Micro-D Circuit Series

Shell Material & Profile
M = Metal Shell, Std Profile
B = Plastic Shell, Std Profile

Backshell Style/Grid Pattern
6 = Straight (Vertical) .100 X .075* (Jackpost Hardware)

*Size 51-3 & 100 have .075 X .075 spacing

Insulator Material
R = PPS

Size (No. of Contacts)
09, 15, 21, 25, 31, 37, 51-3, & 100

Contact Gender & Type
P = Pin, Crimp Type
S = Socket, Crimp Type

Hardware
0 = No Hardware
02 = Low Profile Hex Head Jackscrew (12 for size 100)*
03 = High Profile Hex Head Jackscrew (13 for size 100)*
05 = Low Profile Slotted Head Jackscrew (15 for size 100)*
06 = High Profile Slotted Head Jackscrew (16 for size 100)*
07 = Jackposts (17 for size 100)
22 = Captive Low Profile Hex Head Jackscrews*
23 = Captive High Profile Hex Head Jackscrews*
27 = Helicoil in Flange
0F = Float Mount hardware*
07E = extended jackpost for use wth .196 thick PCB (17E for size 100)
*Hardware only available in backshell styles 16

Threaded Insert (Omit if threaded insert not requried)
T = Threaded Insert in Backshell

Wire Gauge
24**, 25, 26, & 30

Wire Type
C = Solid Wire**

Wire Plating
3 = Pure Tin Plated (RoHS Compliant)**
4 = Gold (.000050 min.) Plated (RoHS Compliant)
5 = Gold (.000010 min.) Plated (RoHS Compliant)
L = Tin/Lead (minimum 3% Lead) Plated (Non-RoHS)
(Not available with high temp (HT) connectors)

Lead Length (in inches)
Blank = 0.109**
Other Lengths = 0.140, 0.172
(Consult Factory for additional lengths)

Panel Mount Options (Omit if panel mounting not required)
(Only available on standard profile metal shells)
RPM = Rear Panel Mount
RPMS = Rear Panel Mount, Sealed w/O-ring
RPMSC = Rear Panel Mount, Sealed w/Conductive O-ring

Panel Thickness (Omit if panel mounting not required) (Thickness in inches)
Available for .031, .047, .062, .080, .094, .125 thick panels
(Consult Factory for additional Panel Thicknesses)

Shell Plating or Material (Omit for plastic shell or cadmium plating)
Blank = Cadmium
S01 = Electroless Nickel
S02 = Chem Film
S03 = Black Anodized
S04 = Gold
S05 = Titanium
S06 = Olive-Drab Cadmium
S07 = Black Nickel
S08 = Nickel-PTFE
S09 = Stainless Steel, Passivated
S10 = Zinc Nickel

Temperature Rating (Omit for standard Temp, 125°C)
Blank = 125°C
HT = 200°C

Special designator - SPL is to be added to the end of the part number if the connector cannot be fully defined by the rest of the engineering number

**For 24 AWG, Pure Tin Plated, 0.109 Length Leads this section of the part number may be omitted

Winchester Interconnect.

Ulti-Mate Connectors

Ulti-Mate Micro-D PCB

Vertical Angle.075 X .075 (Style 7) Connectors

Winchester Interconnect Micro offers Vertical Angle .075 X .075 (Style 7) Connectors. Style 7 is a condensed footprint vertical connector designed to fit circuit board applications, providing a compact and efficient interconnect solution. This connector utilizes the same condensed footprint as Style 17 and is recommended as a drop-in replacement for the MR75 series industry standard. Spacing between rows and between contacts in any one row is 0.075 on the 9 through 100 layouts.

KEY FEATURES & BENEFITS

- Condensed Footprint Design – Optimized for circuit board applications.
- Vertical Mount Configuration – Ideal for compact PCB layouts.
- MR75 Series Compatible – Drop-in replacement for the industry standard.
- Uniform Spacing – 0.075 between rows and contacts on 9–100 layouts.
- Space-Saving Solution – Compact form factor for high-density designs.
- Reliable Performance – Ensures consistent connectivity in demanding environments.

Winchester Interconnect.

DIMENSIONAL

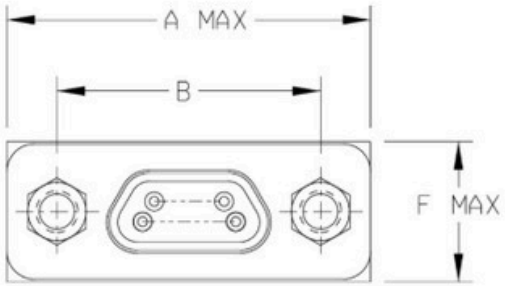

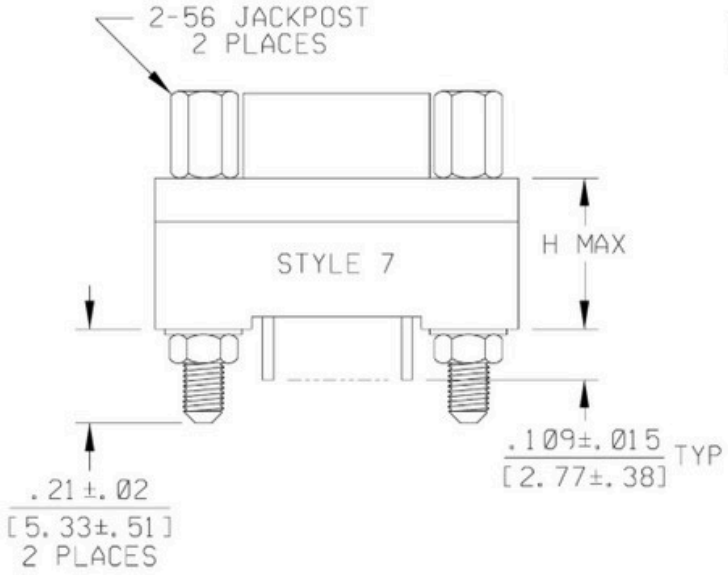

Size	A Max.	B Nom.	C Max.	F Max.	H Max.
9	.785 (19.94)	.565 (14.35)	.400 (10.16)	.310 (7.87)	.330 (8.38)
15	.935 (23.75)	.715 (18.16)	.550 (13.97)	.310 (7.87)	.330 (8.38)
21	1.085 (27.56)	.865 (21.97)	.700 (17.78)	.310 (7.87)	.330 (8.38)
25	1.185 (30.10)	.965 (24.51)	.800 (20.32)	.310 (7.87)	.330 (8.38)
31	1.335 (33.91)	1.115 (28.32)	.950 (24.13)	.310 (7.87)	.330 (8.38)
37	1.485 (37.72)	1.265 (32.13)	1.100 (27.94)	.310 (7.87)	.330 (8.38)
51-3	1.435 (36.45)	1.215 (30.86)	1.045 (26.54)	.400 (10.16)	.345 (8.76)

Winchester Interconnect.

PERFORMANCE

Electrical Properties	
Contact Resistance	8 millihom max contact only + any solid lead resistance (depends on wire AWG) @ 2.5A
Current Rating	3A max.
Dielectric WithStanding Voltage	600 VAC at sea level, 150 VAC at 70,000 feet. 1mA leakage current max.
Insulation Resistance	500 VDC and 5000 Megohms min.

Mechanical Properties	
Engaging Force	6 oz max. (Signal contacts only, no data for Power or Coax contacts)
Separation Force	.5 oz. min. (Signal contacts only, no data for Power or Coax contacts)
Mating/Unmating Force	10 oz x # of contacts max. (Signal contacts only, no data for Power or Coax contacts)
Vibration	EIA-364-28 Condition IV, 1 microsecond max discontinuity
Shock	EIA-364-27 Condition E, 1 microsecond max discontinuity
Durability	500 matings, passes Mating Force, CR, Eng and Sep Forces
Salt Spray	EIA 364-26 Condition B-48 hours

MATERIALS

Materials and Finishes	
Signal Pin Contacts	C17200 Beryllium Copper per ASTM B194
Signal Socket Contacts	C21000 Brass Alloy per ASTM B36
Contact Plating	.000050 Thk Gold Plating per ASTM B488
PC Tails	Copper Wire per A-A-59551 Type S
PC Tail Plating	.000320 min thk Tin plating per ASTM B545, or .000300 min thk Tin/Lead with minimum 3% lead plating per SAE-AMS-P-81728, or .000010 thk Gold plating per ASTM B488
Shell	6061-T6 Aluminum per SAE-AMS-QQ-A200/8 or Passivated 300 Series Stainless Steel
Shell Plating	Electroless Nickel per AMS 2404 or Cadmium Plated per SAE-AMS-QQ-P-416
Insulator Material	Polyphenylene Sulfide (PPS) Per MIL-M-24519 GST-40F
Hardware	Passivated Stainless Steel Per MIL-DTL-83513/05
Interfacial Seals	Fluorosilicone per MIL-R-25988 (Std Profile Receptacles only)

HOW TO ORDER

C M 7 R 25 P 07 T - 24 C 4 - 0.140 - RPM - 0.062 - S01 - HT SPL

Micro-D Circuit Series

Shell Material & Profile
M = Metal Shell, Std Profile
B = Plastic Shell, Std Profile

Backshell Style/Grid Pattern
7 = Straight (Vertical) .075 X .075 (Female Hardware)

Insulator Material
R = PPS

Size (No. of Contacts)
09, 15, 21, 25, 31, 37, 51-3, & 100

Contact Gender & Type
P = Pin, Crimp Type
S = Socket, Crimp Type

Hardware
0 = No Hardware
02 = Low Profile Hex Head Jackscrew (12 for size 100)*
03 = High Profile Hex Head Jackscrew (13 for size 100)*
05 = Low Profile Slotted Head Jackscrew (15 for size 100)*
06 = High Profile Slotted Head Jackscrew (16 for size 100)*
07 = Jackposts (17 for size 100)
22 = Captive Low Profile Hex Head Jackscrews*
23 = Captive High Profile Hex Head Jackscrews*
27 = Helicoil in Flange
0F = Float Mount hardware*
07E = Extended jackpost for .196 thk PCB (17E for size 100)
*Hardware only available in backshell style 17

Threaded Insert (Omit if threaded insert not requried)
T = Threaded Insert in Backshell

Wire Gauge
24**, 25, 26, & 30

Wire Type
C = Solid Wire**

Wire Plating
3 = Pure Tin Plated (RoHS Compliant)**
4 = Gold (.000050 min.) Plated (RoHS Compliant)
5 = Gold (.000010 min.) Plated (RoHS Compliant)
L = Tin/Lead (minimum 3% Lead) Plated (Non-RoHS)
(Not available with high temp (HT) connectors)

Lead Length (in inches)
Blank = 0.109**
Other Lengths = 0.140, 0.172
(Consult Factory for additional lengths)

Panel Mount Options (Omit if panel mounting not required)
(Only available on standard profile metal shells)
RPM = Rear Panel Mount
RPMS = Rear Panel Mount, Sealed w/O-ring
RPMSC = Rear Panel Mount, Sealed w/Conductive O-ring

Panel Thickness (Omit if panel mounting not required) (Thickness in inches)
Available for .031, .047, .062, .080, .094, .125 thick panels
(Consult Factory for additional Panel Thicknesses)

Shell Plating or Material (Omit for plastic shell or cadmium plating)
Blank = Cadmium
S01 = Electroless Nickel
S02 = Chem Film
S03 = Black Anodized
S04 = Gold
S05 = Titanium
S06 = Olive-Drab Cadmium
S07 = Black Nickel
S08 = Nickel-PTFE
S09 = Stainless Steel, Passivated
S10 = Zinc Nickel

Temperature Rating (Omit for standard Temp, 125°C)
Blank = 125°C
HT = 200°C

Special designator - SPL is to be added to the end of the part number if the connector cannot be fully defined by the rest of the engineering number

**For 24 AWG, Pure Tin Plated, 0.109 Length Leads this section of the part number may be omitted

Winchester Interconnect.

Ulti-Mate Connectors

Ulti-Mate Micro-D PCB

Right Angle .075 X .100 (Style 8) Connectors

Style 8 is a condensed footprint right angle connector designed to fit circuit board applications, offering an optimized layout for space savings. It shares the same condensed footprint as Style 18 and is recommended for new designs over older Styles 1 (CBR) and 5 (BR). The termination footprints are contained within the connector body envelope for maximum compactness.

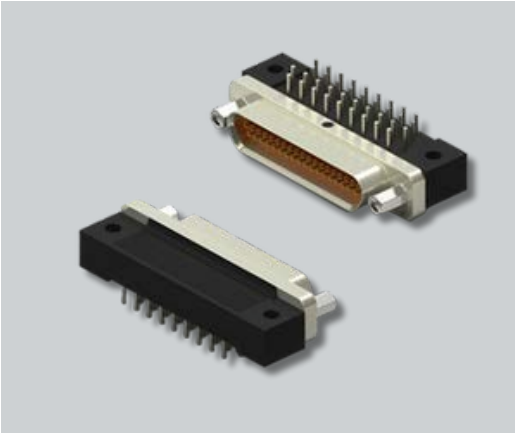

KEY FEATURES & BENEFITS

- Condensed footprint right angle design for circuit board applications.
- Recommended for new designs over Styles 1 (CBR) and 5 (BR).
- Termination footprints contained within connector body for space efficiency.
- Shares same footprint as Style 18 for design flexibility.
- 0.075" row spacing on all layouts.
- Contact spacing: 0.100" for 9–37 layouts and 0.075" for 51–100 layouts.

Micro-D PCB Right Angle .075 X .100 (Style 8)

DIMENSIONAL

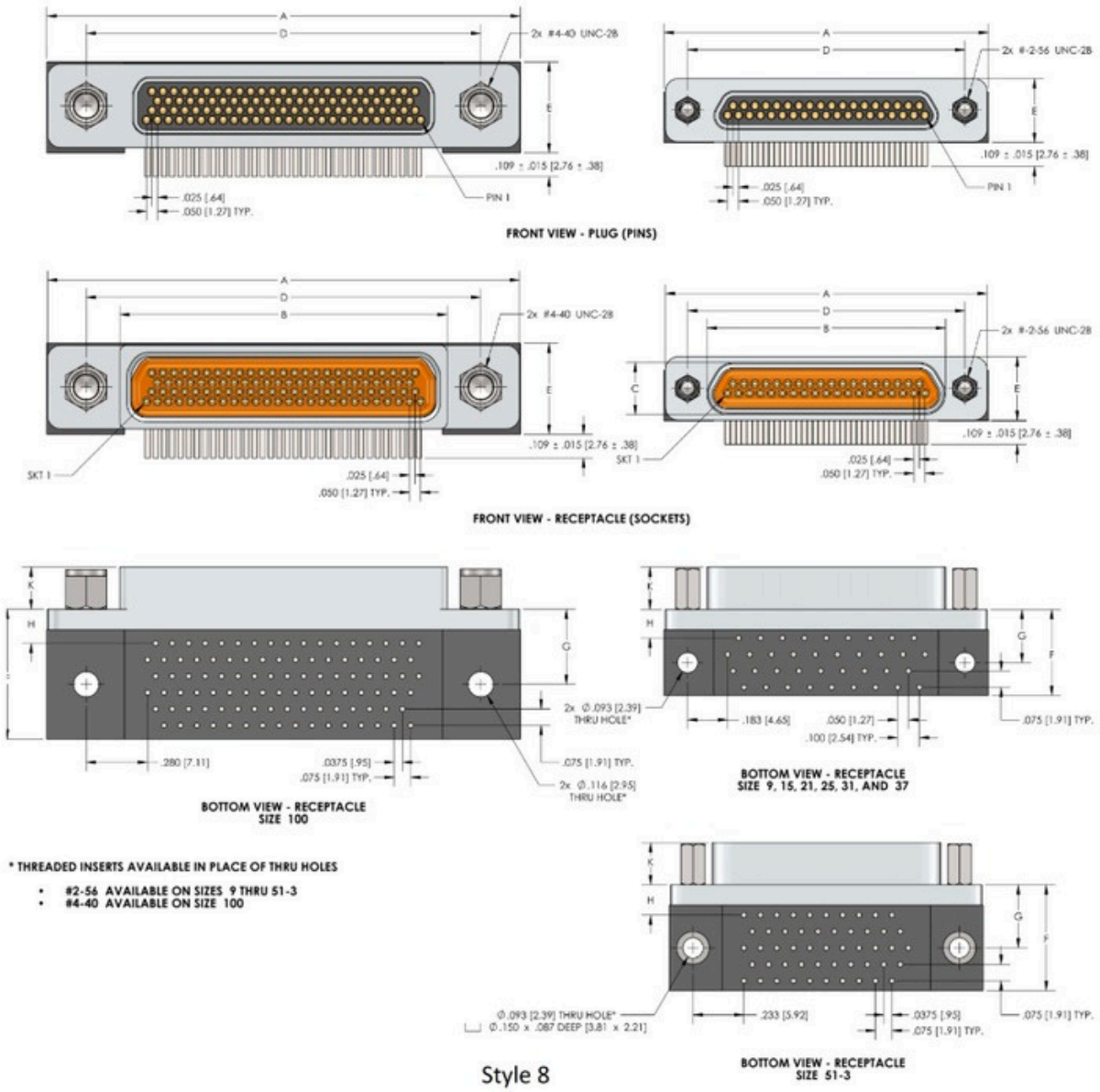

Size	A Max.	B Nom.	C Max.	E Max./ A & P.	E Max./ M & B	F Max.	G Max.	H Max.
9	.785 (19.94)	.565 (14.35)	.400 (10.16)	.218 (5.54)	.308 (7.82)	.410 (10.41)	.250 (6.35)	.138 (3.51)
15	.935 (23.75)	.715 (18.16)	.550 (13.97)	.218 (5.54)	.308 (7.82)	.410 (10.41)	.250 (6.35)	.138 (3.51)
21	1.085 (27.56)	.865 (21.97)	.700 (17.78)	.218 (5.54)	.308 (7.82)	.410 (10.41)	.250 (6.35)	.138 (3.51)
25	1.185 (30.10)	.965 (24.51)	.800 (20.32)	.218 (5.54)	.308 (7.82)	.410 (10.41)	.250 (6.35)	.138 (3.51)
31	1.335 (33.91)	1.115 (28.32)	.950 (24.13)	.218 (5.54)	.308 (7.82)	.410 (10.41)	.250 (6.35)	.138 (3.51)
37	1.485 (37.72)	1.265 (32.13)	1.100 (27.94)	.218 (5.54)	.308 (7.82)	.410 (10.41)	.250 (6.35)	.138 (3.51)
51-3	1.435 (36.45)	1.215 (30.86)	1.045 (26.54)	.260 (6.60)	.351 (8.92)	.500 (12.70)	.295 (7.49)	.145 (3.68)
100	2.170 (55.12)	1.800 (45.72)	1.550 (39.37)	N/A	.394 (10.01)	.615 (15.62)	.350 (8.89)	.163 (4.14)

PERFORMANCE

Electrical Properties	
Contact Resistance	8 millihom max contact only + any solid lead resistance (depends on wire AWG) @ 2.5A
Current Rating	3A max.
Dielectric WithStanding Voltage	600 VAC at sea level, 150 VAC at 70,000 feet. 1mA leakage current max.
Insulation Resistance	500 VDC and 5000 Megohms min.

Mechanical Properties	
Engaging Force	6 oz max. (Signal contacts only, no data for Power or Coax contacts)
Separation Force	.5 oz. min. (Signal contacts only, no data for Power or Coax contacts)
Mating/Unmating Force	10 oz x # of contacts max. (Signal contacts only, no data for Power or Coax contacts)
Vibration	EIA-364-28 Condition IV, 1 microsecond max discontinuity
Shock	EIA-364-27 Condition E, 1 microsecond max discontinuity
Durability	500 matings, passes Mating Force, CR, Eng and Sep Forces
Salt Spray	EIA 364-26 Condition B-48 hours

MATERIALS

Materials and Finishes	
Signal Pin Contacts	C17200 Beryllium Copper per ASTM B194
Signal Socket Contacts	C21000 Brass Alloy per ASTM B36
Contact Plating	.000050 Thk Gold Plating per ASTM B488
PC Tails	Copper Wire per A-A-59551 Type S
PC Tail Plating	.000320 min thk Tin plating per ASTM B545, or .000300 min thk Tin/Lead with minimum 3% lead plating per SAE-AMS-P-81728, or .000010 thk Gold plating per ASTM B488
Shell	6061-T6 Aluminum per SAE-AMS-QQ-A200/8 or Passivated 300 Series Stainless Steel
Shell Plating	Electroless Nickel per AMS 2404 or Cadmium Plated per SAE-AMS-QQ-P-416
Insulator Material	Polyphenylene Sulfide (PPS) Per MIL-M-24519 GST-40F
Hardware	Passivated Stainless Steel Per MIL-DTL-83513/05
Interfacial Seals	Fluorosilicone per MIL-R-25988 (Std Profile Receptacles only)

HOW TO ORDER

C M 8 R 25 P 07 T 24 C 4 0.140 RPM 0.062 S01 HT SPL

Micro-D Circuit Series

Shell Material & Profile
M = Metal Shell, Std Profile
B = Plastic Shell, Std Profile
A = Metal Shell, Low Profile, Recept.
AP = Metal Shell, Low Profile, Plug
P = Plastic Shell, Low Profile

Backshell Style/Grid Pattern
8 = Right Angle (Horizontal) .100 X .075* (Female Hardware)

*Size 51-3 & 100 have .075 X .075 spacing

Insulator Material
R = PPS

Size (No. of Contacts)
09, 15, 21, 25, 31, 37, 51-3, & 100

Contact Gender & Type
P = Pin, Crimp Type
S = Socket, Crimp Type

Hardware
0 = No Hardware
02 = Low Profile Hex Head Jackscrew (12 for size 100)*
03 = High Profile Hex Head Jackscrew (13 for size 100)*
05 = Low Profile Slotted Head Jackscrew (15 for size 100)*
06 = High Profile Slotted Head Jackscrew (16 for size 100)*
07 = Jackposts (17 for size 100)
22 = Captive Low Profile Hex Head Jackscrews*
23 = Captive High Profile Hex Head Jackscrews*
27 = Helicoil in Flange
0F = Float Mount hardware*
*Hardware only available in backshell style 18

Threaded Insert (Omit if threaded insert not requried)
T = Threaded Insert in Backshell

Wire Gauge
24**, 25, 26, & 30

Wire Type
C = Solid Wire**

Wire Plating
3 = Pure Tin Plated (RoHS Compliant)**
4 = Gold (.000050 min.) Plated (RoHS Compliant)
5 = Gold (.000010 min.) Plated (RoHS Compliant)
L = Tin/Lead (minimum 3% Lead) Plated (Non-RoHS)
(Not available with high temp (HT) connectors)

Lead Length (in inches)
Blank = 0.109**
Other Lengths = 0.140, 0.172
(Consult Factory for additional lengths)

Panel Mount Options (Omit if panel mounting not required)
(Only available on standard profile metal shells)
RPM = Rear Panel Mount
RPMS = Rear Panel Mount, Sealed w/O-ring
RPMSC = Rear Panel Mount, Sealed w/Conductive O-ring

Panel Thickness (Omit if panel mounting not required) (Thickness in inches)
Available for .031, .047, .062, .080, .094, .125 thick panels
(Consult Factory for additional Panel Thicknesses)

Shell Plating or Material (Omit for plastic shell or cadmium plating)
Blank = Cadmium
S01 = Electroless Nickel
S02 = Chem Film
S03 = Black Anodized
S04 = Gold
S05 = Titanium
S06 = Olive-Drab Cadmium
S07 = Black Nickel
S08 = Nickel-PTFE
S09 = Stainless Steel, Passivated
S10 = Zinc Nickel

Temperature Rating (Omit for standard Temp, 125°C)
Blank = 125°C
HT = 200°C

Special designator - SPL is to be added to the end of the part number if the connector cannot be fully defined by the rest of the engineering number

**For 24 AWG, Pure Tin Plated, 0.109 Length Leads this section of the part number may be omitted

Winchester Interconnect.

Ulti-Mate Connectors

Ulti-Mate Micro-D PCB

Right Angle .075 X .075 (Style 9) Connectors

Style 9 is a condensed footprint right angle connector designed to fit circuit board applications. It features a compact layout for space-efficient designs and serves as a drop-in replacement for the MR75 series industry standard. Spacing between rows is 0.075" on all layouts, and spacing between contacts in any one row is 0.075" on the 9 through 100 contact layouts.

KEY FEATURES & BENEFITS

- Condensed footprint for circuit board applications.
- Drop-in replacement for MR75 series industry standard.
- 0.075" spacing between rows on all layouts.
- 0.075" spacing between contacts in each row (9–100 layouts).

Micro-D PCB Right Angle .075 X .075 (Style 9)

DIMENSIONAL

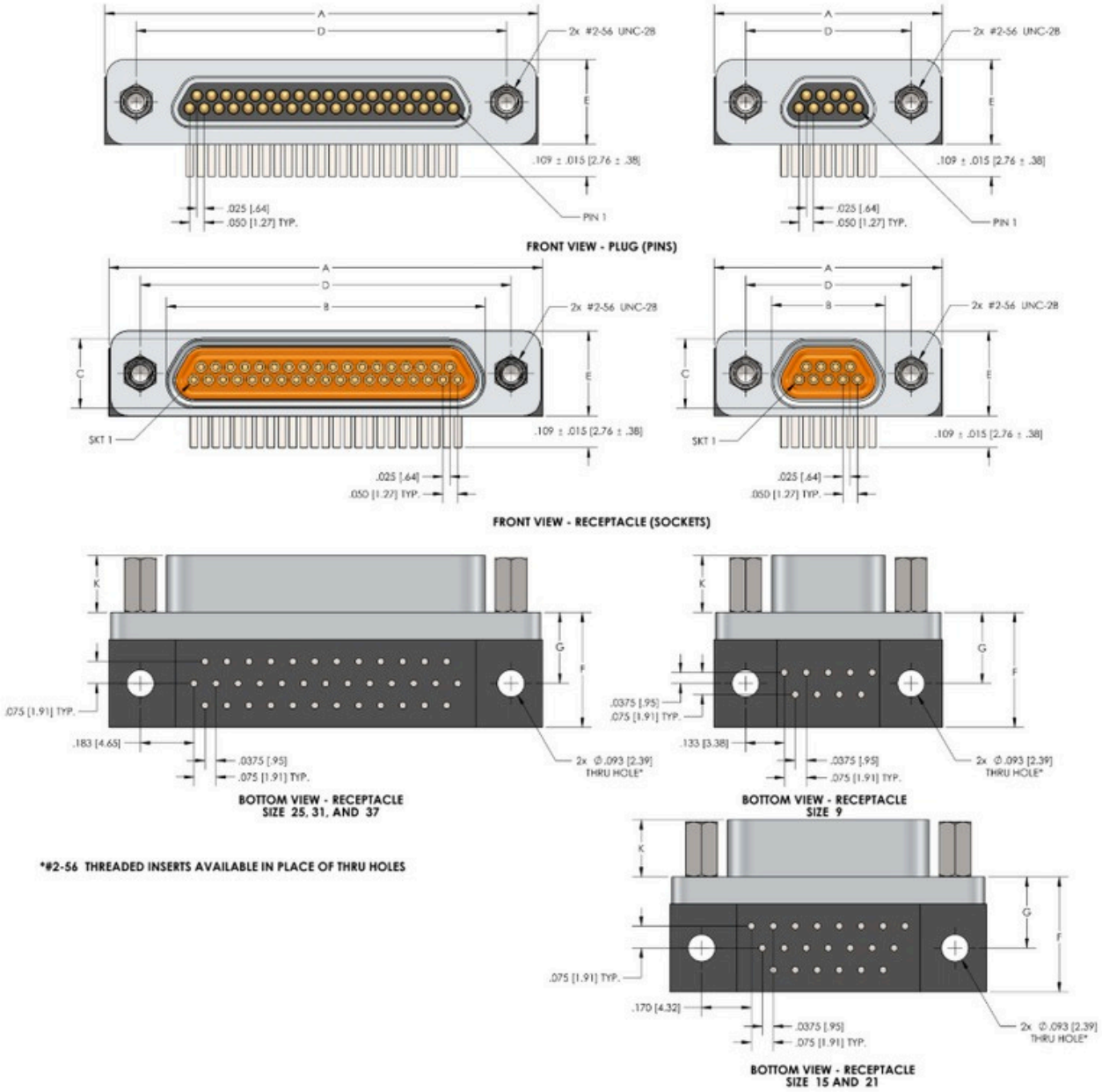

*#2-56 THREADED INSERTS AVAILABLE IN PLACE OF THRU HOLES

Size	A Max.	B Nom.	C Max.	E Max.	F Max.	G Max.	H Nom.
9	.785 (19.94)	.565 (14.35)	.400 (10.16)	.308 (7.82)	.410 (10.41)	.250 (6.35)	.138 (3.51)
15	.935 (23.75)	.715 (18.16)	.550 (13.97)	.308 (7.82)	.410 (10.41)	.250 (6.35)	.138 (3.51)
21	1.085 (27.56)	.865 (21.97)	.700 (17.78)	.308 (7.82)	.410 (10.41)	.250 (6.35)	.138 (3.51)
25	1.185 (30.10)	.965 (24.51)	.800 (20.32)	.308 (7.82)	.410 (10.41)	.250 (6.35)	.138 (3.51)
31	1.335 (33.91)	1.115 (28.32)	.950 (24.13)	.308 (7.82)	.410 (10.41)	.250 (6.35)	.138 (3.51)
37	1.485 (37.72)	1.265 (32.13)	1.100 (27.94)	.308 (7.82)	.410 (10.41)	.250 (6.35)	.138 (3.51)

PERFORMANCE

Electrical Properties	
Contact Resistance	8 millihom max contact only + any solid lead resistance (depends on wire AWG) @ 2.5A
Current Rating	3A max.
Dielectric WithStanding Voltage	600 VAC at sea level, 150 VAC at 70,000 feet. 1mA leakage current max.
Insulation Resistance	500 VDC and 5000 Megohms min.

Mechanical Properties	
Engaging Force	6 oz max. (Signal contacts only, no data for Power or Coax contacts)
Separation Force	.5 oz. min. (Signal contacts only, no data for Power or Coax contacts)
Mating/Unmating Force	10 oz x # of contacts max. (Signal contacts only, no data for Power or Coax contacts)
Vibration	EIA-364-28 Condition IV, 1 microsecond max discontinuity
Shock	EIA-364-27 Condition E, 1 microsecond max discontinuity
Durability	500 matings, passes Mating Force, CR, Eng and Sep Forces
Salt Spray	EIA 364-26 Condition B-48 hours

MATERIALS

Materials and Finishes	
Signal Pin Contacts	C17200 Beryllium Copper per ASTM B194
Signal Socket Contacts	C21000 Brass Alloy per ASTM B36
Contact Plating	.000050 Thk Gold Plating per ASTM B488
PC Tails	Copper Wire per A-A-59551 Type S
PC Tail Plating	.000320 min thk Tin plating per ASTM B545, or .000300 min thk Tin/Lead with minimum 3% lead plating per SAE-AMS-P-81728, or .000010 thk Gold plating per ASTM B488
Shell	6061-T6 Aluminum per SAE-AMS-QQ-A200/8 or Passivated 300 Series Stainless Steel
Shell Plating	Electroless Nickel per AMS 2404 or Cadmium Plated per SAE-AMS-QQ-P-416
Insulator Material	Polyphenylene Sulfide (PPS) Per MIL-M-24519 GST-40F
Hardware	Passivated Stainless Steel Per MIL-DTL-83513/05
Interfacial Seals	Fluorosilicone per MIL-R-25988 (Std Profile Receptacles only)

HOW TO ORDER

C M 9 R 25 P 07 T - 24 C 4 - 0.140 - RPM - 0.062 - S01 - HT SPL

Micro-D Circuit Series

Shell Material & Profile
M = Metal Shell, Std Profile
B = Plastic Shell, Std Profile
A = Metal Shell, Low Profile, Recept.
AP = Metal Shell, Low Profile, Plug
P = Plastic Shell, Low Profile

Backshell Style/Grid Pattern
9 = Right Angle (Horizontal) .075 X .075 (Female Hardware)

Insulator Material
R = PPS

Size (No. of Contacts)
09, 15, 21, 25, 31, 37, 51-3, & 100

Contact Gender & Type
P = Pin, Crimp Type
S = Socket, Crimp Type

Hardware
0 = No Hardware
02 = Low Profile Hex Head Jackscrew (12 for size 100)*
03 = High Profile Hex Head Jackscrew (13 for size 100)*
05 = Low Profile Slotted Head Jackscrew (15 for size 100)*
06 = High Profile Slotted Head Jackscrew (16 for size 100)*
07 = Jackposts (17 for size 100)
22 = Captive Low Profile Hex Head Jackscrews*
23 = Captive High Profile Hex Head Jackscrews*
27 = Helicoil in Flange
0F = Float Mount hardware*
*Hardware only available in backshell style 19

Threaded Insert (Omit if threaded insert not requried)
T = Threaded Insert in Backshell

Wire Gauge
24*, 25, 26, & 30

Wire Type
C = Solid Wire*

Wire Plating
3 = Pure Tin Plated (RoHS Compliant)*
4 = Gold (.000050 min.) Plated (RoHS Compliant)
5 = Gold (.000010 min.) Plated (RoHS Compliant)
L = Tin/Lead (minimum 3% Lead) Plated (Non-RoHS)
(Not available with high temp (HT) connectors)

Lead Length (in inches)
Blank = 0.109*
Other Lengths = 0.140, 0.172
(Consult Factory for additional lengths)

Panel Mount Options (Omit if panel mounting not required)
(Only available on standard profile metal shells)
RPM = Rear Panel Mount
RPMS = Rear Panel Mount, Sealed w/O-ring
RPMSC = Rear Panel Mount, Sealed w/Conductive O-ring

Panel Thickness (Omit if panel mounting not required) (Thickness in inches)
Available for .031, .047, .062, .080, .094, .125 thick panels
(Consult Factory for additional Panel Thicknesses)

Shell Plating or Material (Omit for plastic shell or cadmium plating)
Blank = Cadmium
S01 = Electroless Nickel
S02 = Chem Film
S03 = Black Anodized
S04 = Gold
S05 = Titanium
S06 = Olive-Drab Cadmium
S07 = Black Nickel
S08 = Nickel-PTFE
S09 = Stainless Steel, Passivated
S10 = Zinc Nickel

Temperature Rating (Omit for standard Temp, 125°C)
Blank = 125°C
HT = 200°C

Special designator - SPL is to be added to the end of the part number if the connector cannot be fully defined by the rest of the engineering number

*For 24 AWG, Pure Tin Plated, 0.109 Length Leads this section of the part number may be omitted

Winchester Interconnect.

Ulti-Mate Connectors

Ulti-Mate Micro-D PCB

Vertical Angle .075 X .100 (Style 16) Connectors

Winchester Interconnect Micro offers Vertical Angle .100 X .075 (Style 16) Connectors. Style 16 is a condensed footprint vertical connector specifically designed for flex circuit applications where the use of a jackscrew is necessary. Sharing the same condensed footprint as Style 6, Style 16 is recommended for new designs over the older Style 4 (BS). The termination footprints are contained within the connector body envelope, providing optimal space savings. Spacing between rows is 0.075 on all layouts, and spacing between contacts in any one row is 0.100 on the 9–37 layouts and 0.075 on the 51 and 100 layouts.

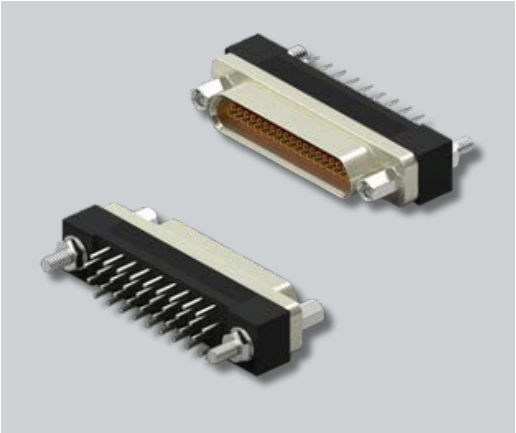

KEY FEATURES & BENEFITS

- Condensed Vertical Design – Optimized for flex circuit applications requiring a jackscrew.
- Space-Saving Footprint – Terminations fully contained within the connector body.
- Modern Replacement – Recommended for new designs over Style 4 (BS).
- Uniform Spacing – 0.075 between rows; 0.100 (9–37) and 0.075 (51–100) between contacts.
- Compact Configuration – Ideal for high-density and flex circuit applications.
- Enhanced Mounting – Supports jackscrew use for secure mechanical connection.

Winchester Interconnect.

Micro-D PCB Vertical Angle .075 X .100 (Style 16)

DIMENSIONAL

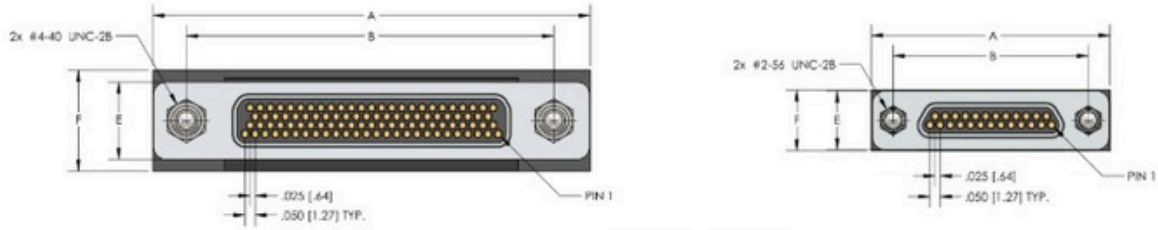

FRONT VIEW - PLUG (PINS)

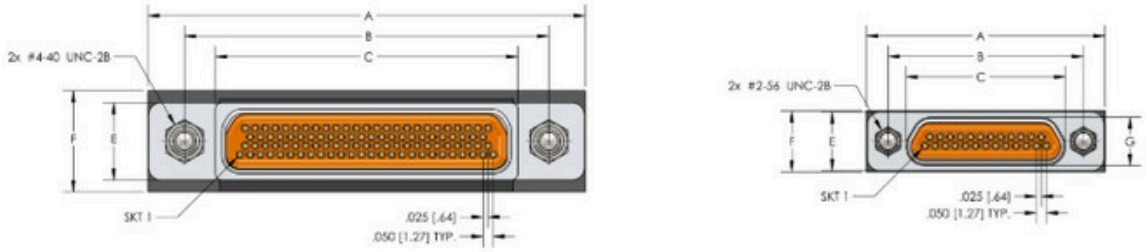

FRONT VIEW - RECEPTACLE (SOCKETS)

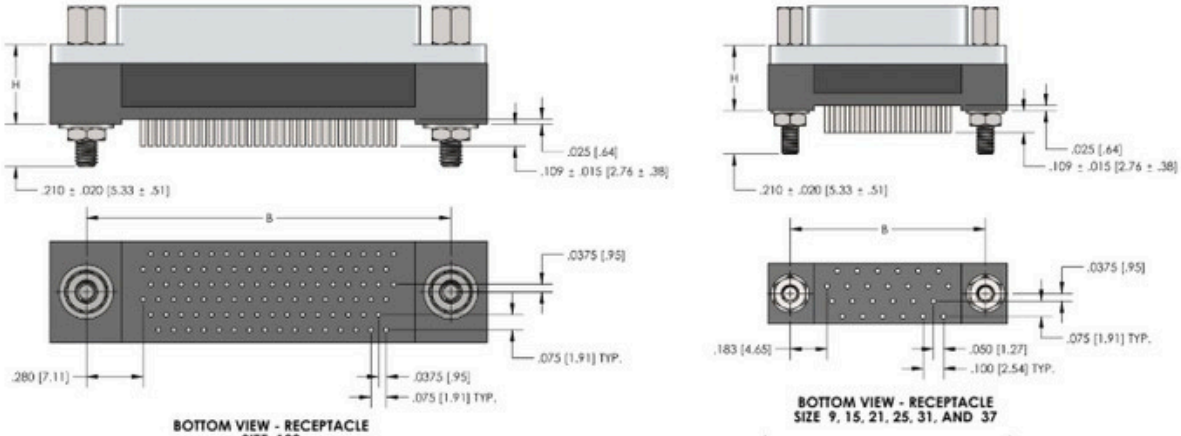

BOTTOM VIEW - RECEPTACLE
SIZE 100

BOTTOM VIEW - RECEPTACLE
SIZE 9, 15, 21, 25, 31, AND 37

BOTTOM VIEW - RECEPTACLE
SIZE 51-3

Size	A Max.	B Nom.	C Max.	E Max.	F Max.	H Max.
9	.785 (19.94)	.565 (14.35)	.400 (10.16)	.308 (7.82)	.310 (7.87)	.330 (8.38)
15	.935 (23.75)	.715 (18.16)	.550 (13.97)	.308 (7.82)	.310 (7.87)	.330 (8.38)
21	1.085 (27.56)	.865 (21.97)	.700 (17.78)	.308 (7.82)	.310 (7.87)	.330 (8.38)
25	1.185 (30.10)	.965 (24.51)	.800 (20.32)	.308 (7.82)	.310 (7.87)	.330 (8.38)
31	1.335 (33.91)	1.115 (28.32)	.950 (24.13)	.308 (7.82)	.310 (7.87)	.330 (8.38)
37	1.485 (37.72)	1.265 (32.13)	1.100 (27.94)	.308 (7.82)	.310 (7.87)	.330 (8.38)
51-3	1.435 (36.45)	1.215 (30.86)	1.045 (26.54)	.308 (7.82)	.400 (10.16)	.345 (8.76)
100	2.165 (54.99)	1.800 (45.72)	1.550 (39.37)	.394 (10.01)	.510 (12.95)	.400 (10.16)

PERFORMANCE

Electrical Properties	
Contact Resistance	8 millihom max contact only + any solid lead resistance (depends on wire AWG) @ 2.5A
Current Rating	3A max.
Dielectric WithStanding Voltage	600 VAC at sea level, 150 VAC at 70,000 feet. 1mA leakage current max.
Insulation Resistance	500 VDC and 5000 Megohms min.

Mechanical Properties	
Engaging Force	6 oz max. (Signal contacts only, no data for Power or Coax contacts)
Separation Force	.5 oz. min. (Signal contacts only, no data for Power or Coax contacts)
Mating/Unmating Force	10 oz x # of contacts max. (Signal contacts only, no data for Power or Coax contacts)
Vibration	EIA-364-28 Condition IV, 1 microsecond max discontinuity
Shock	EIA-364-27 Condition E, 1 microsecond max discontinuity
Durability	500 matings, passes Mating Force, CR, Eng and Sep Forces
Salt Spray	EIA 364-26 Condition B-48 hours

MATERIALS

Materials and Finishes	
Signal Pin Contacts	C17200 Beryllium Copper per ASTM B194
Signal Socket Contacts	C21000 Brass Alloy per ASTM B36
Contact Plating	.000050 Thk Gold Plating per ASTM B488
PC Tails	Copper Wire per A-A-59551 Type S
PC Tail Plating	.000320 min thk Tin plating per ASTM B545, or .000300 min thk Tin/Lead with minimum 3% lead plating per SAE-AMS-P-81728, or .000010 thk Gold plating per ASTM B488
Shell	6061-T6 Aluminum per SAE-AMS-QQ-A200/8 or Passivated 300 Series Stainless Steel
Shell Plating	Electroless Nickel per AMS 2404 or Cadmium Plated per SAE-AMS-QQ-P-416
Insulator Material	Polyphenylene Sulfide (PPS) Per MIL-M-24519 GST-40F
Hardware	Passivated Stainless Steel Per MIL-DTL-83513/05
Interfacial Seals	Fluorosilicone per MIL-R-25988 (Std Profile Receptacles only)

HOW TO ORDER

C M 6 R 25 P 07 T - 24 C 4 - 0.140 - RPM - 0.062 - S01 HT SPL

Micro-D Circuit Series

Shell Material & Profile
M = Metal Shell, Std Profile
B = Plastic Shell, Std Profile

Backshell Style/Grid Pattern

16 = Straight (Vertical) .100 X .075*

*Size 51-3 & 100 have .075 X .075 spacing

Insulator Material
R = PPS

Size (No. of Contacts)
09, 15, 21, 25, 31, 37, 51-3, & 100

Contact Gender & Type
P = Pin, Crimp Type
S = Socket, Crimp Type

Hardware
0 = No Hardware
02 = Low Profile Hex Head Jackscrew (12 for size 100)*
03 = High Profile Hex Head Jackscrew (13 for size 100)*
05 = Low Profile Slotted Head Jackscrew (15 for size 100)*
06 = High Profile Slotted Head Jackscrew (16 for size 100)*
07 = Jackposts (17 for size 100)
22 = Captive Low Profile Hex Head Jackscrews*
23 = Captive High Profile Hex Head Jackscrews*
27 = Helicoil in Flange
0F = Float Mount hardware*
07E = extended jackpost for use wth .196 thick PCB (17E for size 100)
*Hardware only available in backshell styles 16

Threaded Insert (Omit if threaded insert not requried)
T = Threaded Insert in Backshell

Wire Gauge
24**, 25, 26, & 30

Wire Type
C = Solid Wire**

Wire Plating
3 = Pure Tin Plated (RoHS Compliant)**
4 = Gold (.000050 min.) Plated (RoHS Compliant)
5 = Gold (.000010 min.) Plated (RoHS Compliant)
L = Tin/Lead (minimum 3% Lead) Plated (Non-RoHS)
(Not available with high temp (HT) connectors)

Lead Length (in inches)
Blank = 0.109**
Other Lengths = 0.140, 0.172
(Consult Factory for additional lengths)

Panel Mount Options (Omit if panel mounting not required)
(Only available on standard profile metal shells)
RPM = Rear Panel Mount
RPMS = Rear Panel Mount, Sealed w/O-ring
RPMSC = Rear Panel Mount, Sealed w/Conductive O-ring

Panel Thickness (Omit if panel mounting not required) (Thickness in inches)
Available for .031, .047, .062, .080, .094, .125 thick panels
(Consult Factory for additional Panel Thicknesses)

Shell Plating or Material (Omit for plastic shell or cadmium plating)
Blank = Cadmium
S01 = Electroless Nickel
S02 = Chem Film
S03 = Black Anodized
S04 = Gold
S05 = Titanium
S06 = Olive-Drab Cadmium
S07 = Black Nickel
S08 = Nickel-PTFE
S09 = Stainless Steel, Passivated
S10 = Zinc Nickel

Temperature Rating (Omit for standard Temp, 125°C)
Blank = 125°C
HT = 200°C

Special designator - SPL is to be added to the end of the part number if the connector cannot be fully defined by the rest of the engineering number

**For 24 AWG, Pure Tin Plated, 0.109 Length Leads this section of the part number may be omitted

Winchester Interconnect.

Ulti-Mate Connectors

Ulti-Mate Micro-D PCB

Vertical Angle .075 X .100 (Style 17) Connectors

Winchester Interconnect Micro offers Vertical Angle .075 X .075 (Style 17) Connectors. Style 17 is a condensed footprint vertical connector designed for flex circuit applications where the use of a jackscrew is necessary. Sharing the same condensed footprint as Style 7, it is recommended as a drop-in replacement for the MR75 series industry standard. Spacing between rows and between contacts in any one row is 0.075 on the 9 through 100 layouts.

KEY FEATURES & BENEFITS

- Condensed Footprint Design – Optimized for flex circuit applications.
- Jackscrew Compatible – Provides secure retention in flex assemblies.
- MR75 Series Compatible – Drop-in replacement for the industry standard.
- Uniform Spacing – 0.075 between rows and contacts on 9–100 layouts.
- Compact and Efficient – Ideal for high-density, space-constrained designs.
- Reliable Connectivity – Ensures consistent performance in demanding environments.

DIMENSIONAL

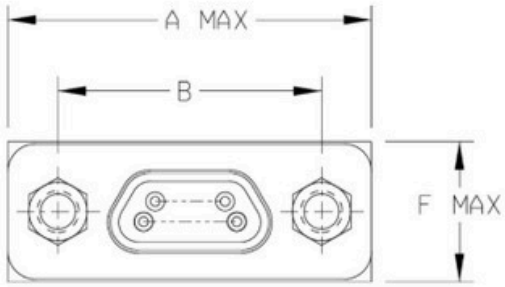

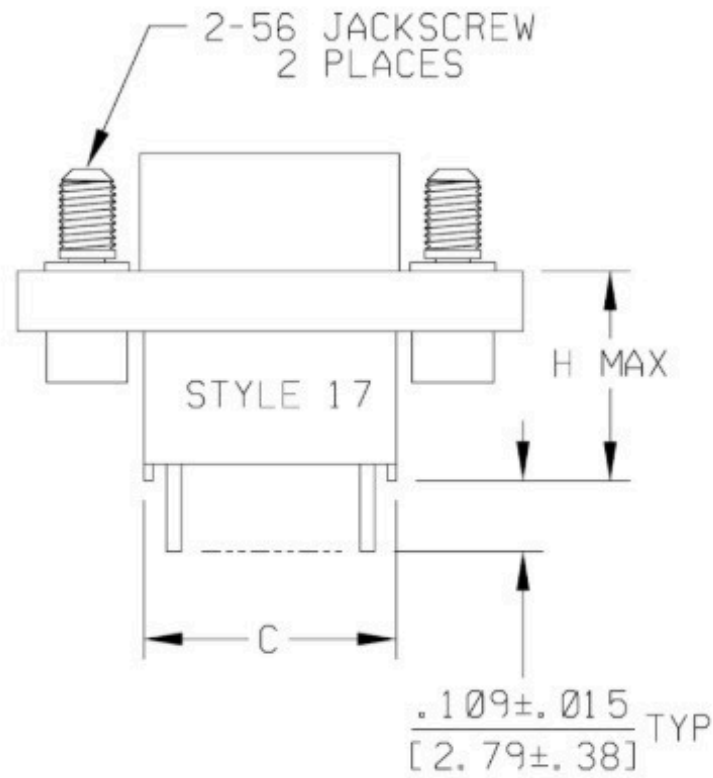

Size	A Max.	B Nom.	C Max.	F Max.	H Max.
9	.785 (19.94)	.565 (14.35)	.400 (10.16)	.310 (7.87)	.330 (8.38)
15	.935 (23.75)	.715 (18.16)	.550 (13.97)	.310 (7.87)	.330 (8.38)
21	1.085 (27.56)	.865 (21.97)	.700 (17.78)	.310 (7.87)	.330 (8.38)
25	1.185 (30.10)	.965 (24.51)	.800 (20.32)	.310 (7.87)	.330 (8.38)
31	1.335 (33.91)	1.115 (28.32)	.950 (24.13)	.310 (7.87)	.330 (8.38)
37	1.485 (37.72)	1.265 (32.13)	1.100 (27.94)	.310 (7.87)	.330 (8.38)
51-3	1.435 (36.45)	1.215 (30.86)	1.045 (26.54)	.400 (10.16)	.345 (8.76)

PERFORMANCE

Electrical Properties	
Contact Resistance	8 millihom max contact only + any solid lead resistance (depends on wire AWG) @ 2.5A
Current Rating	3A max.
Dielectric WithStanding Voltage	600 VAC at sea level, 150 VAC at 70,000 feet. 1mA leakage current max.
Insulation Resistance	500 VDC and 5000 Megohms min.

Mechanical Properties	
Engaging Force	6 oz max. (Signal contacts only, no data for Power or Coax contacts)
Separation Force	.5 oz. min. (Signal contacts only, no data for Power or Coax contacts)
Mating/Unmating Force	10 oz x # of contacts max. (Signal contacts only, no data for Power or Coax contacts)
Vibration	EIA-364-28 Condition IV, 1 microsecond max discontinuity
Shock	EIA-364-27 Condition E, 1 microsecond max discontinuity
Durability	500 matings, passes Mating Force, CR, Eng and Sep Forces
Salt Spray	EIA 364-26 Condition B-48 hours

MATERIALS

Materials and Finishes	
Signal Pin Contacts	C17200 Beryllium Copper per ASTM B194
Signal Socket Contacts	C21000 Brass Alloy per ASTM B36
Contact Plating	.000050 Thk Gold Plating per ASTM B488
PC Tails	Copper Wire per A-A-59551 Type S
PC Tail Plating	.000320 min thk Tin plating per ASTM B545, or .000300 min thk Tin/Lead with minimum 3% lead plating per SAE-AMS-P-81728, or .000010 thk Gold plating per ASTM B488
Shell	6061-T6 Aluminum per SAE-AMS-QQ-A200/8 or Passivated 300 Series Stainless Steel
Shell Plating	Electroless Nickel per AMS 2404 or Cadmium Plated per SAE-AMS-QQ-P-416
Insulator Material	Polyphenylene Sulfide (PPS) Per MIL-M-24519 GST-40F
Hardware	Passivated Stainless Steel Per MIL-DTL-83513/05
Interfacial Seals	Fluorosilicone per MIL-R-25988 (Std Profile Receptacles only)

HOW TO ORDER

C M 7 R 25 P 07 T - 24 C 4 - 0.140 - RPM - 0.062 - S01 - HT SPL

Micro-D Circuit Series

Shell Material & Profile
M = Metal Shell, Std Profile
B = Plastic Shell, Std Profile

Backshell Style/Grid Pattern

17 = Straight (Vertical) .075 X .075 (Male Hardware)

Insulator Material
R = PPS

Size (No. of Contacts)
09, 15, 21, 25, 31, 37, 51-3, & 100

Contact Gender & Type
P = Pin, Crimp Type
S = Socket, Crimp Type

Hardware
0 = No Hardware
02 = Low Profile Hex Head Jackscrew (12 for size 100)*
03 = High Profile Hex Head Jackscrew (13 for size 100)*
05 = Low Profile Slotted Head Jackscrew (15 for size 100)*
06 = High Profile Slotted Head Jackscrew (16 for size 100)*
07 = Jackposts (17 for size 100)
22 = Captive Low Profile Hex Head Jackscrews*
23 = Captive High Profile Hex Head Jackscrews*
27 = Helicoil in Flange
0F = Float Mount hardware*
07E = Extended jackpost for .196 thk PCB (17E for size 100)
*Hardware only available in backshell style 17

Threaded Insert (Omit if threaded insert not requried)
T = Threaded Insert in Backshell

Wire Gauge
24**, 25, 26, & 30

Wire Type
C = Solid Wire**

Wire Plating
3 = Pure Tin Plated (RoHS Compliant)**
4 = Gold (.000050 min.) Plated (RoHS Compliant)
5 = Gold (.000010 min.) Plated (RoHS Compliant)
L = Tin/Lead (minimum 3% Lead) Plated (Non-RoHS)
(Not available with high temp (HT) connectors)

Lead Length (in inches)
Blank = 0.109**
Other Lengths = 0.140, 0.172
(Consult Factory for additional lengths)

Panel Mount Options (Omit if panel mounting not required)
(Only available on standard profile metal shells)
RPM = Rear Panel Mount
RPMS = Rear Panel Mount, Sealed w/O-ring
RPMSC = Rear Panel Mount, Sealed w/Conductive O-ring

Panel Thickness (Omit if panel mounting not required) (Thickness in inches)
Available for .031, .047, .062, .080, .094, .125 thick panels
(Consult Factory for additional Panel Thicknesses)

Shell Plating or Material (Omit for plastic shell or cadmium plating)
Blank = Cadmium
S01 = Electroless Nickel
S02 = Chem Film
S03 = Black Anodized
S04 = Gold
S05 = Titanium
S06 = Olive-Drab Cadmium
S07 = Black Nickel
S08 = Nickel-PTFE
S09 = Stainless Steel, Passivated
S10 = Zinc Nickel

Temperature Rating (Omit for standard Temp, 125°C)
Blank = 125°C
HT = 200°C

Special designator - SPL is to be added to the end of the part number if the connector cannot be fully defined by the rest of the engineering number

**For 24 AWG, Pure Tin Plated, 0.109 Length Leads this section of the part number may be omitted

Winchester Interconnect.

Ulti-Mate Connectors

Ulti-Mate Micro-D PCB

Right Angle.075 X .100 (Style 18) Connectors

Style 18 is a condensed footprint right angle connector designed for flex circuit applications where a jackscrew is required. It shares the same compact footprint as Style 8 and is recommended for new designs over older Styles 1 (CBR) and 5 (BR). The termination footprints are contained within the connector body envelope, providing optimal space savings.

KEY FEATURES & BENEFITS

- Condensed footprint right angle connector for flex circuit applications.
- Includes jackscrew for secure flex circuit retention.
- Recommended for new designs over Styles 1 (CBR) and 5 (BR).
- Termination footprints contained within connector body for compact design.
- Shares same footprint as Style 8 for design interchangeability.
- 0.075" row spacing on all layouts.
- Contact spacing: 0.100" for 9–37 layouts and 0.075" for 51–100 layouts.

Micro-D PCB Right Angle .075 X .100 (Style 8)

DIMENSIONAL

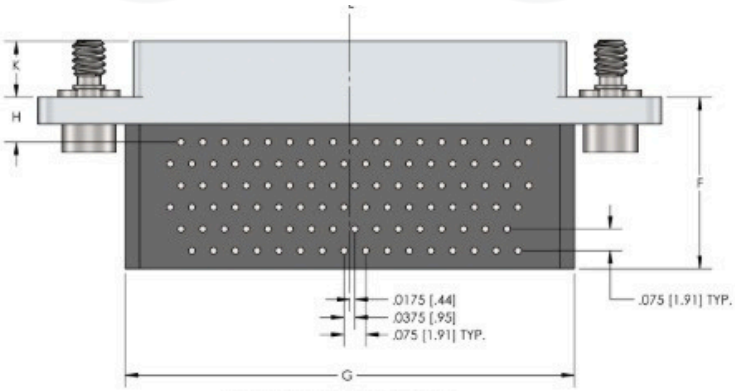

BOTTOM VIEW - RECEPTACLE
SIZE 100

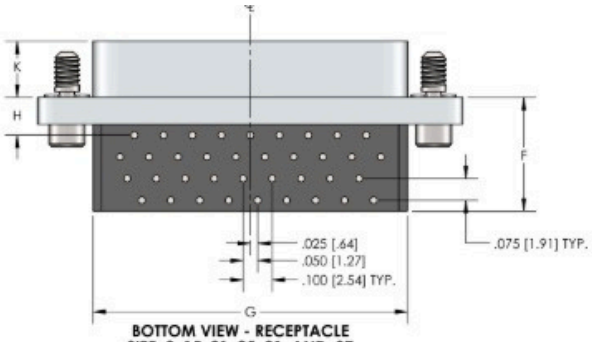

BOTTOM VIEW - RECEPTACLE
SIZE 9, 15, 21, 25, 31, AND 37

Style 18

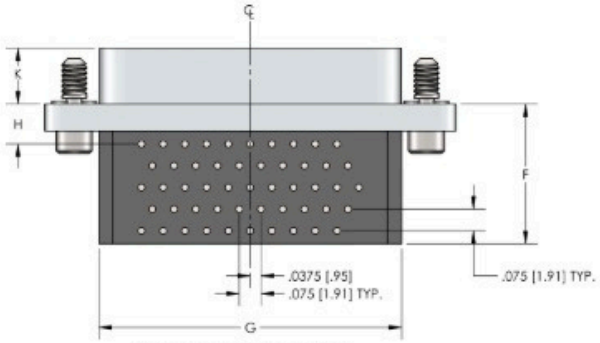

BOTTOM VIEW - RECEPTACLE
SIZE 51-3

Size	A Max.	B Nom.	C Max.	E Max./ A & P.	E Max./ M & B	F Max.	G Max.	H Max.
9	.785 (19.94)	.565 (14.35)	.400 (10.16)	.218 (5.54)	.308 (7.82)	.410 (10.41)	.250 (6.35)	.138 (3.51)
15	.935 (23.75)	.715 (18.16)	.550 (13.97)	.218 (5.54)	.308 (7.82)	.410 (10.41)	.250 (6.35)	.138 (3.51)
21	1.085 (27.56)	.865 (21.97)	.700 (17.78)	.218 (5.54)	.308 (7.82)	.410 (10.41)	.250 (6.35)	.138 (3.51)
25	1.185 (30.10)	.965 (24.51)	.800 (20.32)	.218 (5.54)	.308 (7.82)	.410 (10.41)	.250 (6.35)	.138 (3.51)
31	1.335 (33.91)	1.115 (28.32)	.950 (24.13)	.218 (5.54)	.308 (7.82)	.410 (10.41)	.250 (6.35)	.138 (3.51)
37	1.485 (37.72)	1.265 (32.13)	1.100 (27.94)	.218 (5.54)	.308 (7.82)	.410 (10.41)	.250 (6.35)	.138 (3.51)
51-3	1.435 (36.45)	1.215 (30.86)	1.045 (26.54)	.260 (6.60)	.351 (8.92)	.500 (12.70)	.295 (7.49)	.145 (3.68)
100	2.170 (55.12)	1.800 (45.72)	1.550 (39.37)	N/A	.394 (10.01)	.615 (15.62)	.350 (8.89)	.163 (4.14)

PERFORMANCE

Electrical Properties	
Contact Resistance	8 millihom max contact only + any solid lead resistance (depends on wire AWG) @ 2.5A
Current Rating	3A max.
Dielectric WithStanding Voltage	600 VAC at sea level, 150 VAC at 70,000 feet. 1mA leakage current max.
Insulation Resistance	500 VDC and 5000 Megohms min.

Mechanical Properties	
Engaging Force	6 oz max. (Signal contacts only, no data for Power or Coax contacts)
Separation Force	.5 oz. min. (Signal contacts only, no data for Power or Coax contacts)
Mating/Unmating Force	10 oz x # of contacts max. (Signal contacts only, no data for Power or Coax contacts)
Vibration	EIA-364-28 Condition IV, 1 microsecond max discontinuity
Shock	EIA-364-27 Condition E, 1 microsecond max discontinuity
Durability	500 matings, passes Mating Force, CR, Eng and Sep Forces
Salt Spray	EIA 364-26 Condition B-48 hours

MATERIALS

Materials and Finishes	
Signal Pin Contacts	C17200 Beryllium Copper per ASTM B194
Signal Socket Contacts	C21000 Brass Alloy per ASTM B36
Contact Plating	.000050 Thk Gold Plating per ASTM B488
PC Tails	Copper Wire per A-A-59551 Type S
PC Tail Plating	.000320 min thk Tin plating per ASTM B545, or .000300 min thk Tin/Lead with minimum 3% lead plating per SAE-AMS-P-81728, or .000010 thk Gold plating per ASTM B488
Shell	6061-T6 Aluminum per SAE-AMS-QQ-A200/8 or Passivated 300 Series Stainless Steel
Shell Plating	Electroless Nickel per AMS 2404 or Cadmium Plated per SAE-AMS-QQ-P-416
Insulator Material	Polyphenylene Sulfide (PPS) Per MIL-M-24519 GST-40F
Hardware	Passivated Stainless Steel Per MIL-DTL-83513/05
Interfacial Seals	Fluorosilicone per MIL-R-25988 (Std Profile Receptacles only)

HOW TO ORDER

C M 8 R 25 P 07 T 24 C 4 0.140 RPM 0.062 S01 HT SPL

Micro-D Circuit Series

Shell Material & Profile
M = Metal Shell, Std Profile
B = Plastic Shell, Std Profile
A = Metal Shell, Low Profile, Recept.
AP = Metal Shell, Low Profile, Plug
P = Plastic Shell, Low Profile

Backshell Style/Grid Pattern

18 = Right Angle (Horizontal) .100 X .075* (Male Hardware)
*Size 51-3 & 100 have .075 X .075 spacing

Insulator Material
R = PPS

Size (No. of Contacts)
09, 15, 21, 25, 31, 37, 51-3, & 100

Contact Gender & Type
P = Pin, Crimp Type
S = Socket, Crimp Type

Hardware
0 = No Hardware
02 = Low Profile Hex Head Jackscrew (12 for size 100)*
03 = High Profile Hex Head Jackscrew (13 for size 100)*
05 = Low Profile Slotted Head Jackscrew (15 for size 100)*
06 = High Profile Slotted Head Jackscrew (16 for size 100)*
07 = Jackposts (17 for size 100)
22 = Captive Low Profile Hex Head Jackscrews*
23 = Captive High Profile Hex Head Jackscrews*
27 = Helicoil in Flange
0F = Float Mount hardware*
*Hardware only available in backshell style 18

Threaded Insert (Omit if threaded insert not requried)
T = Threaded Insert in Backshell

Wire Gauge
24**, 25, 26, & 30

Wire Type
C = Solid Wire**

Wire Plating
3 = Pure Tin Plated (RoHS Compliant)**
4 = Gold (.000050 min.) Plated (RoHS Compliant)
5 = Gold (.000010 min.) Plated (RoHS Compliant)
L = Tin/Lead (minimum 3% Lead) Plated (Non-RoHS)
(Not available with high temp (HT) connectors)

Lead Length (in inches)
Blank = 0.109**
Other Lengths = 0.140, 0.172
(Consult Factory for additional lengths)

Panel Mount Options (Omit if panel mounting not required)
(Only available on standard profile metal shells)
RPM = Rear Panel Mount
RPMS = Rear Panel Mount, Sealed w/O-ring
RPMSC = Rear Panel Mount, Sealed w/Conductive O-ring

Panel Thickness (Omit if panel mounting not required) (Thickness in inches)
Available for .031, .047, .062, .080, .094, .125 thick panels
(Consult Factory for additional Panel Thicknesses)

Shell Plating or Material (Omit for plastic shell or cadmium plating)
Blank = Cadmium
S01 = Electroless Nickel
S02 = Chem Film
S03 = Black Anodized
S04 = Gold
S05 = Titanium
S06 = Olive-Drab Cadmium
S07 = Black Nickel
S08 = Nickel-PTFE
S09 = Stainless Steel, Passivated
S10 = Zinc Nickel

Temperature Rating (Omit for standard Temp, 125°C)
Blank = 125°C
HT = 200°C

Special designator - SPL is to be added to the end of the part number if the connector cannot be fully defined by the rest of the engineering number

**For 24 AWG, Pure Tin Plated, 0.109 Length Leads this section of the part number may be omitted

Winchester Interconnect.

Ulti-Mate Connectors

Ulti-Mate Micro-D PCB

RightAngle.075 X .075 (Style 19) Connectors

Style 19 is a condensed footprint right angle connector designed for flex circuit applications where a jackscrew is required. It shares the same condensed footprint as Style 9 and serves as a drop-in replacement for the MR75 series industry standard. Spacing between rows is 0.075", and spacing between contacts in each row is 0.075" for 9 through 100 contact layouts.

KEY FEATURES & BENEFITS

- Condensed footprint right angle design.
- Optimized for flex circuit applications.
- Includes jackscrew for secure connection.
- Drop-in replacement for MR75 series industry standard.
- 0.075" row and contact spacing for 9–100 layouts.

DIMENSIONAL

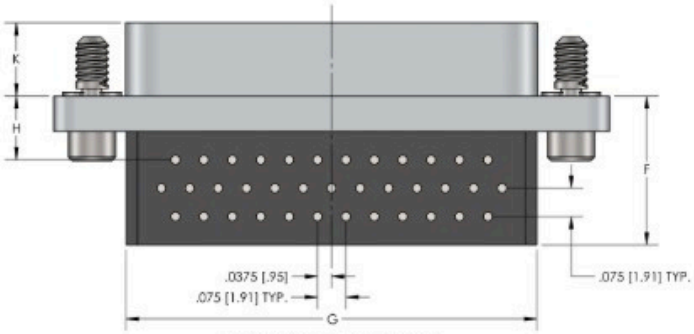

BOTTOM VIEW - RECEPTACLE
SIZE 25, 31, AND 37

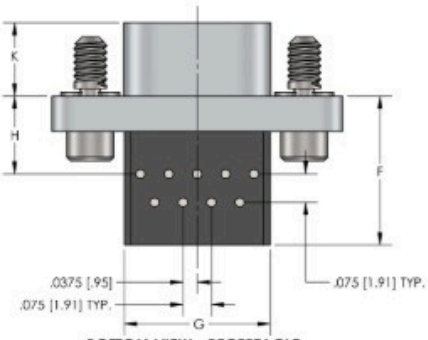

BOTTOM VIEW - RECEPTACLE
SIZE 9

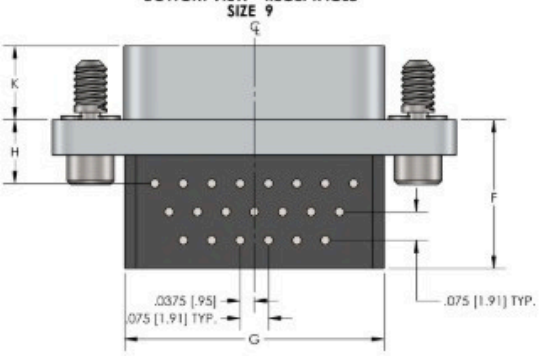

BOTTOM VIEW - RECEPTACLE
SIZE 15 AND 21

Size	A Max.	B Nom.	C Max.	E Max.	F Max.	G Max.	H Nom.
9	.785 (19.94)	.565 (14.35)	.400 (10.16)	.308 (7.82)	.410 (10.41)	.250 (6.35)	.138 (3.51)
15	.935 (23.75)	.715 (18.16)	.550 (13.97)	.308 (7.82)	.410 (10.41)	.250 (6.35)	.138 (3.51)
21	1.085 (27.56)	.865 (21.97)	.700 (17.78)	.308 (7.82)	.410 (10.41)	.250 (6.35)	.138 (3.51)
25	1.185 (30.10)	.965 (24.51)	.800 (20.32)	.308 (7.82)	.410 (10.41)	.250 (6.35)	.138 (3.51)
31	1.335 (33.91)	1.115 (28.32)	.950 (24.13)	.308 (7.82)	.410 (10.41)	.250 (6.35)	.138 (3.51)
37	1.485 (37.72)	1.265 (32.13)	1.100 (27.94)	.308 (7.82)	.410 (10.41)	.250 (6.35)	.138 (3.51)

Winchester Interconnect.

PERFORMANCE

Electrical Properties	
Contact Resistance	8 millihom max contact only + any solid lead resistance (depends on wire AWG) @ 2.5A
Current Rating	3A max.
Dielectric WithStanding Voltage	600 VAC at sea level, 150 VAC at 70,000 feet. 1mA leakage current max.
Insulation Resistance	500 VDC and 5000 Megohms min.

Mechanical Properties	
Engaging Force	6 oz max. (Signal contacts only, no data for Power or Coax contacts)
Separation Force	.5 oz. min. (Signal contacts only, no data for Power or Coax contacts)
Mating/Unmating Force	10 oz x # of contacts max. (Signal contacts only, no data for Power or Coax contacts)
Vibration	EIA-364-28 Condition IV, 1 microsecond max discontinuity
Shock	EIA-364-27 Condition E, 1 microsecond max discontinuity
Durability	500 matings, passes Mating Force, CR, Eng and Sep Forces
Salt Spray	EIA 364-26 Condition B-48 hours

MATERIALS

Materials and Finishes	
Signal Pin Contacts	C17200 Beryllium Copper per ASTM B194
Signal Socket Contacts	C21000 Brass Alloy per ASTM B36
Contact Plating	.000050 Thk Gold Plating per ASTM B488
PC Tails	Copper Wire per A-A-59551 Type S
PC Tail Plating	.000320 min thk Tin plating per ASTM B545, or .000300 min thk Tin/Lead with minimum 3% lead plating per SAE-AMS-P-81728, or .000010 thk Gold plating per ASTM B488
Shell	6061-T6 Aluminum per SAE-AMS-QQ-A200/8 or Passivated 300 Series Stainless Steel
Shell Plating	Electroless Nickel per AMS 2404 or Cadmium Plated per SAE-AMS-QQ-P-416
Insulator Material	Polyphenylene Sulfide (PPS) Per MIL-M-24519 GST-40F
Hardware	Passivated Stainless Steel Per MIL-DTL-83513/05
Interfacial Seals	Fluorosilicone per MIL-R-25988 (Std Profile Receptacles only)

HOW TO ORDER

C M 9 R 25 P 07 T - 24 C 4 - 0.140 - RPM - 0.062 - S01 - HT SPL

Micro-D Circuit Series

Shell Material & Profile
M = Metal Shell, Std Profile
B = Plastic Shell, Std Profile
A = Metal Shell, Low Profile, Recept.
AP = Metal Shell, Low Profile, Plug
P = Plastic Shell, Low Profile

Backshell Style/Grid Pattern

19 = Right Angle (Horizontal) .075 X .075 (Male Hardware)

Insulator Material
R = PPS

Size (No. of Contacts)
09, 15, 21, 25, 31, 37, 51-3, & 100

Contact Gender & Type
P = Pin, Crimp Type
S = Socket, Crimp Type

Hardware
0 = No Hardware
02 = Low Profile Hex Head Jackscrew (12 for size 100)*
03 = High Profile Hex Head Jackscrew (13 for size 100)*
05 = Low Profile Slotted Head Jackscrew (15 for size 100)*
06 = High Profile Slotted Head Jackscrew (16 for size 100)*
07 = Jackposts (17 for size 100)
22 = Captive Low Profile Hex Head Jackscrews*
23 = Captive High Profile Hex Head Jackscrews*
27 = Helicoil in Flange
0F = Float Mount hardware*
*Hardware only available in backshell style 19

Threaded Insert (Omit if threaded insert not requried)
T = Threaded Insert in Backshell

Wire Gauge
24*, 25, 26, & 30

Wire Type
C = Solid Wire*

Wire Plating
3 = Pure Tin Plated (RoHS Compliant)*
4 = Gold (.000050 min.) Plated (RoHS Compliant)
5 = Gold (.000010 min.) Plated (RoHS Compliant)
L = Tin/Lead (minimum 3% Lead) Plated (Non-RoHS)
(Not available with high temp (HT) connectors)

Lead Length (in inches)
Blank = 0.109*
Other Lengths = 0.140, 0.172
(Consult Factory for additional lengths)

Panel Mount Options (Omit if panel mounting not required)
(Only available on standard profile metal shells)
RPM = Rear Panel Mount
RPMS = Rear Panel Mount, Sealed w/O-ring
RPMSC = Rear Panel Mount, Sealed w/Conductive O-ring

Panel Thickness (Omit if panel mounting not required) (Thickness in inches)
Available for .031, .047, .062, .080, .094, .125 thick panels
(Consult Factory for additional Panel Thicknesses)

Shell Plating or Material (Omit for plastic shell or cadmium plating)
Blank = Cadmium
S01 = Electroless Nickel
S02 = Chem Film
S03 = Black Anodized
S04 = Gold
S05 = Titanium
S06 = Olive-Drab Cadmium
S07 = Black Nickel
S08 = Nickel-PTFE
S09 = Stainless Steel, Passivated
S10 = Zinc Nickel

Temperature Rating (Omit for standard Temp, 125°C)
Blank = 125°C
HT = 200°C

Special designator - SPL is to be added to the end of the part number if the connector cannot be fully defined by the rest of the engineering number

*For 24 AWG, Pure Tin Plated, 0.109 Length Leads this section of the part number may be omitted

Winchester Interconnect.

Ulti-Mate Connectors

ULTI-MATE MICRO-D PCB

Surface Mount Connectors

Winchester Interconnect Micro offers Micro-D Surface Mount Connectors that deliver high performance in compact designs. Using Surface Mount Technology (SMT), these connectors are soldered directly onto PCB copper pads, ensuring a strong, vibration-resistant electrical connection. Available in various pin counts and configurations, they provide dependable performance in limited-space environments. Ideal for military, aerospace, medical, and industrial applications requiring durability and reliability.

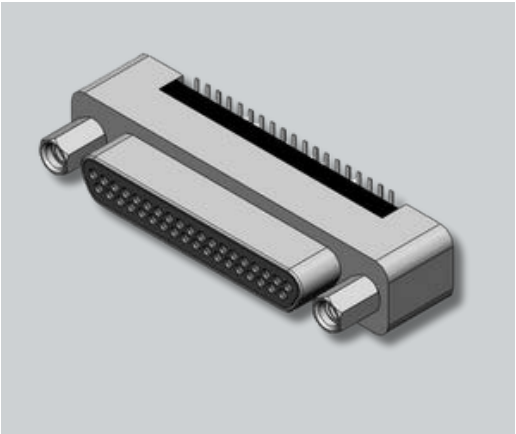

KEY FEATURES & BENEFITS

- Surface Mount Design – Enables direct PCB attachment for compact assemblies.
- Durable and Reliable – Withstands mechanical stress and vibration for long-term stability.
- Multiple Configurations – Available in a variety of pin counts and layouts to suit design needs.
- High-Performance Connectivity – Ensures strong electrical integrity in demanding environments.
- Versatile Applications – Ideal for use in military, aerospace, medical, and industrial systems.

DIMENSIONAL

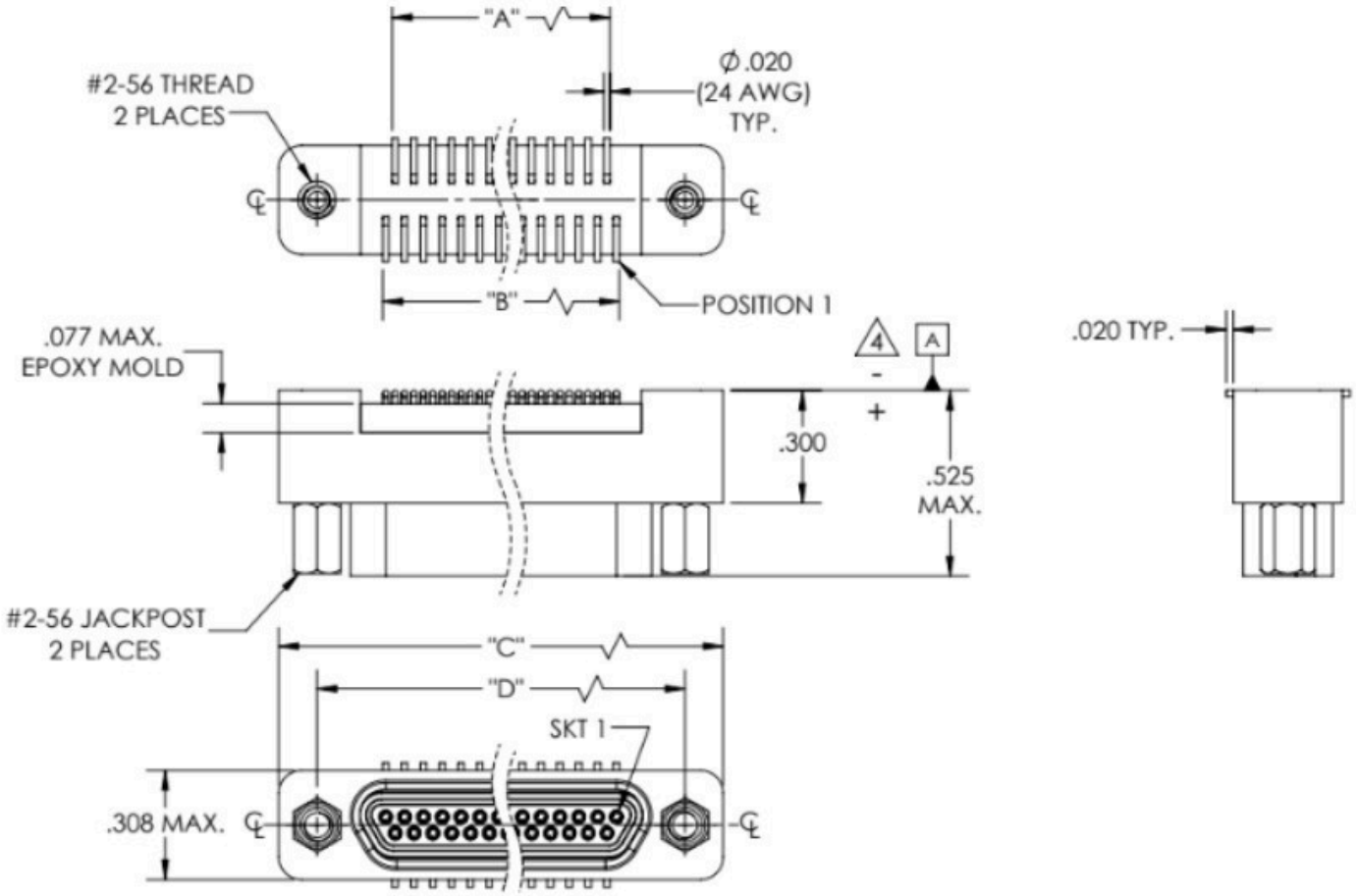

Size	Dim "A"	Dim "B"	Dim "C"	Dim "D"
9	.166	.216	.768	.565
15	.316	.366	.918	.715
21	.466	.516	1.068	.865
25	.556	.616	1.168	.965
31	.716	.766	1.318	1.115
37	.866	.916	1.468	1.265

PCB

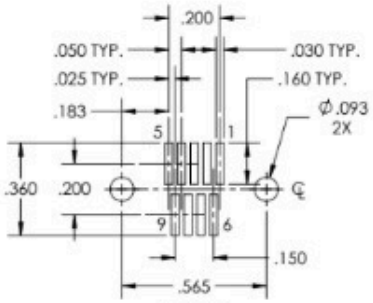

SIZE 9

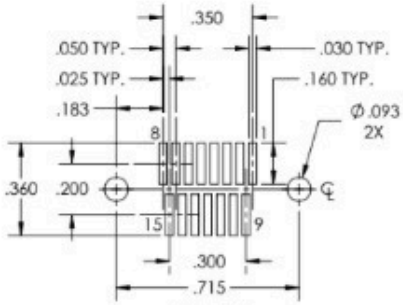

SIZE 15

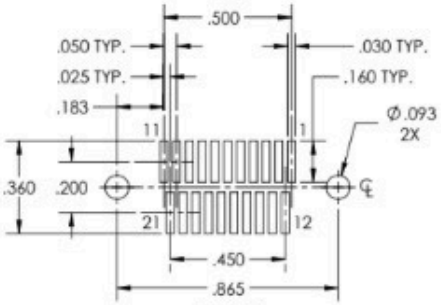

SIZE 21

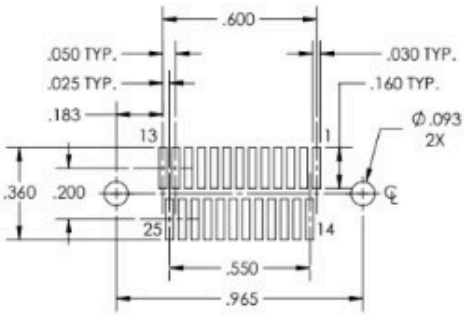

SIZE 25

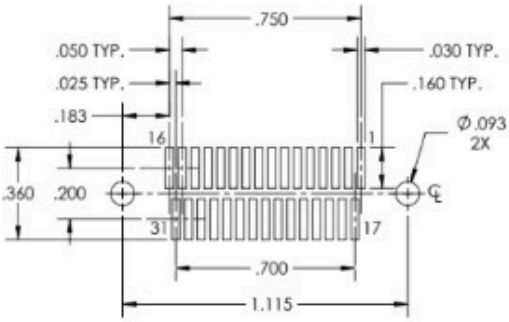

SIZE 31

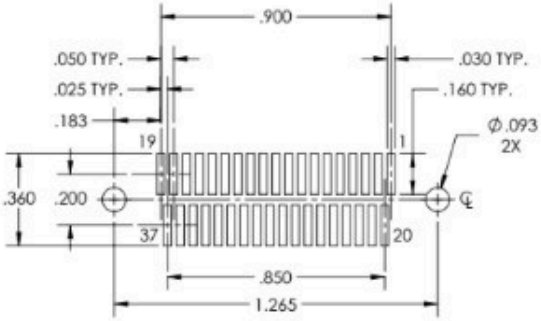

SIZE 37

Winchester Interconnect.

PERFORMANCE

Electrical Properties	
Contact Resistance	8 millihom max contact only + any solid lead resistance (depends on wire AWG) @ 2.5A
Current Rating	3A max.
Dielectric WithStanding Voltage	600 VAC at sea level, 150 VAC at 70,000 feet. 1mA leakage current max.
Insulation Resistance	500 VDC and 5000 Megohms min.

Mechanical Properties	
Engaging Force	6 oz max. (Signal contacts only, no data for Power or Coax contacts)
Separation Force	.5 oz. min. (Signal contacts only, no data for Power or Coax contacts)
Mating/Unmating Force	10 oz x # of contacts max. (Signal contacts only, no data for Power or Coax contacts)
Vibration	EIA-364-28 Condition IV, 1 microsecond max discontinuity
Shock	EIA-364-27 Condition E, 1 microsecond max discontinuity
Durability	500 matings, passes Mating Force, CR, Eng and Sep Forces
Salt Spray	EIA 364-26 Condition B-48 hours

MATERIALS

Materials and Finishes	
Signal Pin Contacts	C17200 Beryllium Copper per ASTM B194
Signal Socket Contacts	C21000 Brass Alloy per ASTM B36
Contact Plating	.000050 Thk Gold Plating per ASTM B488
PC Tails	Copper Wire per A-A-59551 Type S
PC Tail Plating	.000320 min thk Tin plating per ASTM B545, or .000300 min thk Tin/Lead with minimum 3% lead plating per SAE-AMS-P-81728, or .000010 thk Gold plating per ASTM B488
Shell	6061-T6 Aluminum per SAE-AMS-QQ-A200/8 or Passivated 300 Series Stainless Steel
Shell Plating	Electroless Nickel per AMS 2404 or Cadmium Plated per SAE-AMS-QQ-P-416
Insulator Material	Polyphenylene Sulfide (PPS) Per MIL-M-24519 GST-40F
Hardware	Passivated Stainless Steel Per MIL-DTL-83513/05
Interfacial Seals	Fluorosilicone per MIL-R-25988 (Std Profile Receptacles only)

About Winchester Interconnect

Winchester Interconnect is a US-based manufacturer of high-precision connectors, cable assemblies, and cable. Our products are ideal for military and aerospace, industrial, medical, and space applications where expertise and reliability are critical to your success.

Our 30,000+ connectivity solutions include standard and custom RF and microwave interconnects, hermetic connectors and packaging, micro-miniature connectors and assemblies, fiber optic connectors, industrial cable, and undersea cable

We work in the toughest industries where failure is not an option.For connectivity applications requiring high performance in harsh environments, life-saving systems, and the latest connected technologies, our industry-leading knowledge and engineering capabilities will ensure reliable, cutting-edge interconnect solutions that won't fail when it matters most.

Our Industries & Market Solutions

Industrial Automation

Space

Oil & Gas

Marine Subsea

Aerospace & Defense

Semiconductor

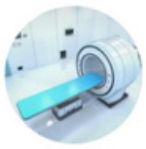
Medical

Custom

Winchester Interconnect

www.winconn.com